Arora V 60K FPGA Products

# Programming and Configuration Guide

**UG718-1.0.4E, 10/11/2025**

**Copyright © 2025 Guangdong Gowin Semiconductor Corporation. All Rights Reserved.**

GOWIN is the trademark of Guangdong Gowin Semiconductor Corporation and is registered in China and/or other countries or regions. All other words and logos identified as trademarks or service marks are the property of their respective holders. No part of this document may be reproduced or transmitted in any form or by any denotes, electronic, mechanical, photocopying, recording or otherwise, without the prior written consent of GOWINSEMI.

**Disclaimer**

GOWINSEMI assumes no liability and provides no warranty (either expressed or implied) and is not responsible for any damage incurred to your hardware, software, data, or property resulting from usage of the materials or intellectual property except as outlined in the GOWINSEMI Terms and Conditions of Sale. GOWINSEMI may make changes to this document at any time without prior notice. Anyone relying on this documentation should contact GOWINSEMI for the current documentation and errata.

## Revision History

| Date | Version | Description |
|---|---|---|
| 05/22/2024 | 1.0E | Initial version published. |
| 06/28/2024 | 1.0.1E | Configuration file size and the MSPI mode bitstream loading time updated. |
| 01/16/2025 | 1.0.2E | ● 3.1 Configuration Mode updated, SSPI configuration mode description added.<br>● SSPI configuration process timing diagram added. |
| 06/13/2025 | 1.0.3E | ● Descriptions to clarify that RECONFIG_N cannot be used as a GPIO added.<br>● Previous descriptions indicating that RECONFIG_N can be used as a GPIO removed.<br>● Configuration Pin List updated. |
| 10/11/2025 | 1.0.4E | ● 6.1 Multi Boot Process updated.<br>● Figure 3-27 The Flow Chart of SRAM Configuration via SSPI, Figure 4-2 Power Recycle Timing, and Figure 4-5 POR Timing updated. |

# Contents

**Contents** ..... i

**List of Figures** ..... iii

**List of Tables** ..... v

**1 About This Guide** ..... 1

1.1 Purpose ..... 1
1.2 Related Documents ..... 1
1.3 Terminology and Abbreviations ..... 1
1.4 Support and Feedback ..... 3

**2 Glossary** ..... 4

**3 Configuration Interface** ..... 6

3.1 Configuration Mode ..... 6
3.2 Configuration Pins ..... 8
3.3 Configuration Clock for Master Modes ..... 17
3.4 JTAG Configuration Mode ..... 17
3.4.1 Connection Diagram for the JTAG Configuration Mode ..... 17
3.4.2 JTAG Configuration Timing ..... 18
3.4.3 JTAG Configuration Process ..... 19
3.5 SSPI Configuration Mode ..... 30
3.5.1 Connection Diagram for SSPI Configuration Mode ..... 30
3.5.2 SSPI Configuration Timing ..... 32
3.5.3 SSPI Configuration Instructions ..... 33
3.5.4 SRAM Configuration via SSPI ..... 36
3.5.5 Flash Programming via SSPI ..... 36
3.5.6 SRAM Configuration via SSPIx4 ..... 38
3.6 MSPI Configuration Mode ..... 39
3.6.1 Connection Diagram for MSPI Configuration Mode ..... 39
3.6.2 MSPI Configuration Timing ..... 41
3.6.3 MSPI ..... 42
3.7 CPU Configuration Mode ..... 43
3.7.1 Connection Diagram for CPU Configuration Mode ..... 43
3.7.2 Configuration Timing ..... 44
3.7.3 Continuous Data Loading ..... 45
3.7.4 Non-continuous Data Loading ..... 45

3.8 SERIAL Configuration Mode ..... 46
3.8.1 Connection Diagram for SERIAL Configuration Mode ..... 46
3.9 Daisy Chain ..... 47
3.9.1 Serial Daisy Chain ..... 47
3.9.2 Parallel Daisy Chain ..... 48

**4 Configuration Details ..... 49**

4.1 Configuration Notes ..... 49
4.2 Configuration Sequence ..... 52
4.2.1 Power-Up Timing ..... 53
4.2.2 Initialization ..... 53
4.2.3 Configuration ..... 54
4.2.4 Wake-up ..... 54
4.2.5 User Modes ..... 54
4.3 Safety Precautions ..... 54
4.4 Bitstream File Configuration ..... 56
4.4.1 Configuration Options ..... 56
4.4.2 Configure Data Encryption ..... 57
4.4.3 Configuration File Size ..... 65
4.4.4 Configuration File Loading Time ..... 67
4.5 SPI Flash Selection ..... 68

**5 Status Register and Efuse Definition ..... 69**

5.1 Status Register ..... 69
5.2 OTP Efuse ..... 71

**6 Multi Boot and Background Update ..... 72**

6.1 Multi Boot Process ..... 72
6.2 Background Upgrade and Hotboot ..... 73

# List of Figures

Figure 3-1 Configuring Pin Reuse ..... 16
Figure 3-2 Configuration Clock Structure in Master Modes ..... 17
Figure 3-3 Connection Diagram for JTAG Configuration Mode ..... 17
Figure 3-4 Connection Diagram of JTAG Programming External Flash ..... 18
Figure 3-5 JTAG Configuration timing ..... 18
Figure 3-6 TAP State Machine ..... 19
Figure 3-7 Instruction Register Access Timing ..... 20
Figure 3-8 Data Register Access Timing ..... 21
Figure 3-9 Flow Chart of Reading ID Code State Machine ..... 22
Figure 3-10 Access Timing of Reading ID Code Instruction- 0x11 ..... 23
Figure 3-11 Access Timing of Reading ID Code Data Register ..... 23
Figure 3-12 SRAM Configuration Flow ..... 25
Figure 3-13 Process View of Programming SPI Flash ..... 26
Figure 3-14 Timing diagram of JTAG- SPI Sending 0x06 (Arora V) ..... 27
Figure 3-15 Process of Program ming Flash in SVF Mode ..... 27
Figure 3-16 OTP Configuration Flow ..... 28
Figure 3-17 Process of reading OTP ..... 29
Figure 3-18 SSPI Configuration Mode Connection Diagram ..... 30
Figure 3-19 Multiple FPGA Connection Diagram ..... 30
Figure 3-20 Connection Diagram of Programming External Flash via SSPI ..... 31
Figure 3-21 SSPI Configuration Process Timing ..... 32
Figure 3-21 SSPI Configuration Timing ..... 32
Figure 3-22 Read ID Code Timing ..... 34
Figure 3-23 Write Enable (0x15) Timing ..... 34
Figure 3-24 Write Disable(0x3A00) Timing ..... 34
Figure 3-25 Write Data (0x3B) Timing ..... 35
Figure 3-26 The Flow Chart of SRAM Configuration via SSPI ..... 36
Figure 3-27 The Flow Chart of Programming Flash via SSPI ..... 37
Figure 3-28 The Flow Chart of SRAM Configuration via QSSPI ..... 38
Figure 3-29 QSSPI Configuration Mode Connection Diagram ..... 39
Figure 3-30 QSSPI Write Data (0x6B) Timing ..... 39

Figure 3-31 Connection Diagram for MSPIx1 Configuration Mode ..... 40
Figure 3-32 Connection Diagram for MSPIx2 Configuration Mode ..... 40
Figure 3-33 Connection Diagram for MSPIx4 Configuration Mode ..... 40
Figure 3-34 MSPI Configuration Timing ..... 41
Figure 3-35 The Flow Chart of MSPI Mode ..... 42
Figure 3-36 Connection Diagram for CPU Mode ..... 43
Figure 3-37 CPU Mode Configuration Timing ..... 44
Figure 3-38 Continuous Data Loading Timing ..... 45
Figure 3-39 Non Continuous Data Loading Timing ..... 45
Figure 3-40 Connection Diagram for SERIAL Mode ..... 46
Figure 3-41 SERIAL Configuration Timing ..... 46
Figure 3 - 42 Diagram of Daisy-Chain ..... 47
Figure 3 - 43 Diagram of Parallel Daisy-Chain ..... 48
Figure 4-1 Process of Power on ..... 49
Figure 4-2 Power Recycle Timing ..... 50
Figure 4-3 Trigger Timing ..... 51
Figure 4-4 GOWINSEMI FPGA Configuration Process ..... 52
Figure 4-5 POR Timing ..... 53
Figure 4-6 Configuration Options ..... 56
Figure 4-7 Encryption Key Setting Method ..... 58
Figure 4-8 Setting the Decryption Key ..... 59
Figure 4-9 AES Security Configure ..... 60
Figure 4-10 Prepare ..... 61
Figure 4-11 Read AES Key Flow ..... 62
Figure 4-12 Program AES Key Flow ..... 63
Figure 4-13 Program AES Key2 Flow ..... 64
Figure 4-14 Lock AES Key Flow ..... 65
Figure 4-15 Bitstream Format generation ..... 66
Figure 4-16 Process of Power on ..... 67
Figure 6-1 Multi- Configuration Flow ..... 73

# List of Tables

Table 1-1 Terminology and Abbreviations ..... 1
Table 2-1 Glossary ..... 4
Table 3-1 Configuration Modes (MODE [1:0]) ..... 6
Table 3-2 Configuration Modes (MODE [2:0]) ..... 7
Table 3-3 Configuration Modes (MODE [3:0]) ..... 8
Table 3-3 Configuration Pin List (1 of 2) ..... 9
Table 3-4 Configuration Pin List (1 of 2) ..... 10
Table 3-5 Pin Definitions ..... 11
Table 3-6 Pin Reuse Options ..... 15
Table 3-7 JTAG Configuration Timing Parameters ..... 19
Table 3-8 V FPGA IDCODE ..... 21
Table 3-9 Change of TDI and TMS Value in The Process of Sending Instructions ..... 21
Table 3-10 SSPI Configuration Timing Parameters ..... 33
Table 3-11 Configuration Instruction ..... 33
Table 3-12 MSPI Configuration Timing Parameters ..... 41
Table 3-13 CPU Configuration Timing Parameters ..... 44
Table 3-14 SERIAL Configuration Timing Parameters ..... 47
Table 4-1 Timing Parameters of Power on Again and RECONFIG_N triggering for Arora V FPGA Products ..... 51
Table 4-2 Power Rails ..... 53
Table 4-3 Arora V FPGA Products Configuration File Size (Max.) ..... 66
Table 4-4 Loading Time in MSPI Mode ..... 67
Table 4-5 SPI Flash Operation Instruction ..... 68
Table 5-1 GW5AT-60 Status Register ..... 69
Table 5-2 GW5AT-60 OTP Definitions ..... 71

# 1 About This Guide

## 1.1 Purpose

This guide mainly introduces general features and functions on programming and configuration of Arora V 60K FPGA products. It helps users to use Gowin FPGA products to their full potential.

## 1.2 Related Documents

The latest user guides are available on the GOWINSEMI website. You can find the related documents at www.gowinsemi.com:

- DS981, GW5AT series of FPGA Products Data Sheet
- DS1103, GW5A series of FPGA Products Data Sheet
- DS1111, GW5AT series of FPGA Products (Automotive) Data Sheet
- UG1222, GW5AT-60 Pinout
- UG1229, GW5A-60 Pinout

## 1.3 Terminology and Abbreviations

The terminology and abbreviations used in this manual are as shown in Table 1-1.

**Table 1-1 Terminology and Abbreviations**

| Terminology and Abbreviations | Full Name | Description |
|---|---|---|
| Background Programming | Embedded Flash Background Programming | Programs the on-chip Flash without affecting the current functions and I/O state. |
| Bitstream | Bitstream Data | The data of configuring the FPGA SRAM |
| Bscan | Boundary Scan | Boundary Scan |
| Configuration | Configuration | The process of configuring the FPGA SRAM area |
| Configuration Data | Configuration Data | The data of configuring the FPGA SRAM |
| Configuration Mode | Configuration Mode | Configuration mode, determine the |

| Terminology and Abbreviations | Full Name | Description |
|---|---|---|
| | | Configuration Data source. |
| CPU | Central Processing Unit | Central Processing Unit |
| CRC | Cyclic Redundancy Check | Cyclic Redundancy Check |
| Edit Mode | Edit Mode | The FPGA in Configuration mode or Programming mode |
| EFlash/EmbFlash | Embedded Flash | Internal Flash Memory |
| FPGA | Field Programmable Gate Array | Field Programmable Gate Array |
| FS file | Fuses file | ASCII file including the configuration data |
| GPIO | General Purpose Input Output | General Purpose Input Output |
| I2C（$I^2C$, IIC） | Inter-Integrated Circuit | $I^2C$ |
| ID | Identification | Identification |
| IEEE | Institute of Electrical and Electronics Engineers | Institute of Electrical and Electronics Engineers |
| Internal Flash | Internal Flash | Same with Embedded Flash |
| JTAG | Joint Test Action Group | Joint Test Action Group |
| LSB | Least Significant Bit | Least Significant Bit (priority) |
| LUT | Look-up Table | Look-up Table |
| MSB | Most Significant Bit | Most Significant Bit (priority) |
| MSPI | Master Serial Peripheral Interface | Master Serial Peripheral Interface |
| Programming | Programming | The process of programming the Configuration Data to the Embedded Flash or the External Flash memory |
| SCL | Serial Clock | Clock line of I2C |
| SDA | Serial Data | Serial Data |
| Security Bit | Security Bit | Security Bit (readback the SRAM to keep high level) |
| SPI | Serial Peripheral Interface | Serial Peripheral Interface |
| SRAM | Static Random Access Memory | Static Random Access Memory |
| SSPI | Slave Serial Peripheral Interface | Slave Serial Peripheral Interface |
| TAP | Test Access Port | Test Access Port |
| User Mode | User Mode | The mode in which the FPGA executes the corresponding logic functions after the programming or configuration has been completed. |

## 1.4 Support and Feedback

Gowin Semiconductor provides customers with comprehensive technical support. If you have any questions, comments, or suggestions, please feel free to contact us directly using the information provided below.

Website: www.gowinsemi.com

E-mail: support@gowinsemi.com

# 2 Glossary

This chapter presents an overview of the terms that are commonly used in the process of programming and configuring GOWIN FPGA products to help users get familiar with the related concepts.

**Table 2-1 Glossary**

| Glossary | Meaning |
|---|---|
| Program | Write the bitstream data generated by Gowin Software to the embedded Flash or external SPI Flash of FPGA. |
| Configure | Load the bitstream data generated by Gowin software to the FPGA SRAM via external interfaces or embedded Flash. |
| MODE[2:0] | A representation of the three MODE pin values associated with GowinCONFIG. |
| MSPI Configuration | As a master, FPGA is configured by reading bitstream from the external Flash via SPI interface automatically. |
| SSPI Configuration | As a slave device, the bitstream data is written into the FPGA via the SPI interface by the external master. |
| SERIAL Configuration | As a slave device, the bitstream data is written into the FPGA via the serial interface by the external master. |
| CPU Configuration | As a slave device, the bitstream data is written into the FPGA via the parallel interface (8-bit) by the external master. |
| MULTI BOOT | The derivative concept of MSPI, it refers to that FPGA reads bitstream data from different addresses of external Flash. The loading address of the latter bitstream data is written in previous bitstream data and the configuration is completed by triggering RECONFIG_N to switch the data stream file under the condition that the device power is on. FPGA products that supports MSPI all support this mode. |
| Remote Upgrade | After a FPGA starts to work, if an upgrade is required, first write bitstream to an embedded or external Flash through remote operation, and then the FPGA reads the external Flash by triggering RECONFIG_N or powering up again to complete the configuration. |
| Daisy Chain | FPGA devices are connected sequentially in a serial way. Devices can be configured from the head of the chain in sequence according to the connection order, and data can only be transmitted between adjacent devices. |
| User Mode | Hands over control to users when the FPGA configuration has been completed. Only in user mode, configuration pins can be reused as GPIOs (Gowin Programmable I/O). |

| Glossary | Meaning |
|---|---|
| Edit Mode | FPGA can be programmed and configured in this mode.<br>All configuration pins cannot be reused as GPIOs. All GPIO outputs are high-impedance state except for background upgrades. |
| ID CODE | Identification for the the Gowin FPGA device. Each series of devices has a different number. |
| USER CODE | Used to identify the FPGA device. 32-bit user code can be written to the FPGA device through Gowin programmer. |
| Security Bit | After you write the bitstream with security bit to the device SRAM, no one will be able to read back the data. Gowin software sets a security bit for the bitstream data of all FPGA products by default. |
| Encryption | Arora family of FPGA products support this feature. After the encrypted bitstream is written into FPGA, the device will match the pre-stored key automatically, and then decrypt and wake up the device after successful matching. The device cannot work if the matching fails. |

# 3 Configuration Interface

## 3.1 Configuration Mode

**Table 3-1 Configuration Modes (MODE [1:0])**

| Configuration Mode | MODE[1:0][1] | Bus Width | Description |
|---|---|---|---|
| JTAG | XX[2] | - | Arora V FPGA products are configured by external Host via JTAG interface |
| MSPI | 01 | x1, x2, x4 | As a Master, FPGA reads data from external Flash (or other devices) via the SPI interface for configuration |
| SSPI | 01 | x1, x4 | ● FPGA will automatically enters SSPI mode after either a successful or failed MSPI loading.<br>● As a Slave, FPGA reads data from external Flash (or other devices) via the SPI interface for configuration. |
| Master SERIAL | 01 | x1 | Before FPGA is used as a Slave, FPGA reads data from external devices via the DIN interface for configuration |
| Slave SERIAL | 11 | x1 | Arora V FPGA products are configured by external Host via DIN interface |
| Master CPU | 00 | x8, x16 | Before FPGA used as a Slave, FPGA reads data from external devices via the DBUS interface for configuration |
| Slave CPU | 10 | | Arora V FPGA products are configured by external Host via DBUS interface |

**Note!**

- [1] Please refer to the related Pinout manuals for the status of the unbound MODE pins.
- [2] The JTAG configuration mode is independent of the input values of MODE [1:0];

**Table 3-2 Configuration Modes (MODE [2:0])**

| Configuration Mode | MODE[2:0][1] | Bus Width | Description |
|---|---|---|---|
| JTAG | XXX[2] | - | Arora V FPGA products are configured by external Host via JTAG interface |
| MSPI | 001 | x1, x2, x4 | As a Master, FPGA reads data from external Flash (or other devices) via the SPI interface for configuration |
| SSPI | 001 | x1, x4 | ● FPGA will automatically enters SSPI mode after either a successful or failed MSPI loading.<br>● As a Slave, FPGA reads data from external Flash (or other devices) via the SPI interface for configuration. |
| Master SERIAL | 000 | x1 | Before FPGA is used as a Slave, FPGA reads data from external devices via the DIN interface for configuration |
| Slave SERIAL | 111 | x1 | Arora V FPGA products are configured by external Host via DIN interface |
| Master CPU | 100 | x8, x16 | Before FPGA used as a Slave, FPGA reads data from external devices via the DBUS interface for configuration |
| Slave CPU | 110 | | Arora V FPGA products are configured by external Host via DBUS interface |

**Note!**

- [1] Please refer to the related Pinout manuals for the status of the unbound MODE pins.
- [2] The JTAG configuration mode is independent of the input values of MODE [2:0].

**Table 3-3 Configuration Modes (MODE [3:0])**

| Configuration Mode | MODE[3:0][1] | Bus Width | Description |
|---|---|---|---|
| JTAG | XXXX[2] | - | Arora V FPGA products are configured by external Host via JTAG interface |
| MSPI | X101/0100/X011 | x1,x2,x4 | As a Master, FPGA reads data from external Flash (or other devices) via the SPI interface for configuration |
| SSPI | X101/0100/X011 | x1, x4 | ● FPGA will automatically enters SSPI mode after either a successful or failed MSPI loading.<br>● As a Slave, FPGA reads data from external Flash (or other devices) via the SPI interface for configuration. |
| Master SERIAL | X101/0100/X011 | x1 | Before FPGA is used as a Slave, FPGA reads data from external devices via the DIN interface for configuration |
| Slave SERIAL | X000/1100 | x1 | Arora V FPGA products are configured by external Host via DIN interface |
| Master CPU | X001 | x8, x16 | Before FPGA used as a Slave, FPGA reads data from external devices via the DBUS interface for configuration |
| Slave CPU | X110/X111 | | Arora V FPGA products are configured by external Host via DBUS interface |

**Note!**

- [1] Please refer to the related Pinout manuals for the status of the unbound MODE pins.
- [2] The JTAG configuration mode is independent of the input values of MODE [3:0].

# 3.2 Configuration Pins

The programming and configuration pins can be used as configuration pins and also can be reused as GPIOs. Users can configure the pins as required. Users also can configure them according to their configuration functions to meet specific requirements. Table 3-4 and Table 3-5 contain a list of all the configuration pins of Gowin FPGA products together with the details of the pins used in each configuration mode and the shared pins in chip packages.

**Note!**

When configuration I/Os are reused, note that some configuration I/Os have status requirements during power-on and configuration. Otherwise, the device programming may be affected. When the number of common I/Os meets the requirement, it’s not suggested to reuse the configuration I/Os.

**Table 3-4 Configuration Pin List (1 of 2)**

| Pin Name | Bank | JTAG (Only) | Slave Serial | Master Serial | Master SPI | | | Slave SPI | |
|---|---|---|---|---|---|---|---|---|---|
| | | | | | x1 | x2 | x4 | x1 | x4 |
| MODE [3:0] | 7 | XXXX | X000/1100 | X101/0100/X011 | X101/0100/X011 | X101/0100/X011 | X101/0100/X011 | X000/1100 | X000/1100 |
| MODE [2:0] | 7 | XXX | 111 | 000 | 001 | 001 | 001 | 010 | 010 |
| MODE [1:0] | 7 | XX | 11 | 01 | 01 | 01 | 01 | 01 | 01 |
| RECONFIG_N | 10 | √ | √ | √ | √ | √ | √ | √ | √ |
| READY | 10 | √ | √ | √ | √ | √ | √ | √ | √ |
| DONE | 10 | √ | √ | √ | √ | √ | √ | √ | √ |
| TCK | 10 | TCK | TCK | TCK | TCK | TCK | TCK | TCK | TCK |
| TMS | 10 | TMS | TMS | TMS | TMS | TMS | TMS | TMS | TMS |
| TDI | 10 | TDI | TDI | TDI | TDI | TDI | TDI | TDI | TDI |
| TDO | 10 | TDO | TDO | TDO | TDO | TDO | TDO | TDO | TDO |
| CCLK | 10 | - | CCLK | CCLK | CCLK | CCLK | CCLK | - | - |
| CFGUP | 11 | √ | √ | √ | √ | √ | √ | √ | √ |
| PUDC_B | 3/4[1] | √ | √ | √ | √ | √ | √ | √ | √ |
| EMCCLK | 3/4 | - | - | EMCCLK | EMCCLK | EMCCLK | EMCCLK | - | - |
| CSI_B | 3/4 | - | - | - | - | - | - | - | - |
| DOUT_CSO_B | 3/4 | - | DOUT | DOUT | - | - | - | - | - |
| RDWR_B | 3/4 | - | - | - | - | - | - | - | - |
| MCS_N | 3/4 | - | - | - | MCS_N | MCS_N | MCS_N | - | - |
| D00_MOSI | 3/4 | - | - | - | MOSI | MOSI/D00 | MOSI/D00 | - | - |
| D01_DIN | 3/4 | - | DIN | DIN | D01 | D01 | D01 | - | - |
| D02 | 3/4 | - | - | - | - | - | D02 | - | - |
| D03 | 3/4 | - | - | - | - | - | D03 | - | - |
| SSPI_CS_N | 3/4 | - | - | - | - | - | - | SSPI_CS_N | SSPI_CS_N |
| D05_SI | 3/4 | - | - | - | - | - | - | SSPI_SI | SSPI_IO0 |
| D06_SSPI_CLK | 3/4 | - | - | - | - | - | - | SSPI_CLK | SSPI_CLK |
| D07_SSPI_WPN | 3/4 | - | - | - | - | - | - | SSPI_WPN | SSPI_IO2 |
| D08_SO | 3/4 | - | - | - | - | - | - | SSPI_SO | SSPI_IO1 |
| CLKHOLD_N | 3/4 | - | - | - | - | - | - | SSPI_HOLD | SSPI_IO3 |
| D04 | 3/4 | - | - | - | - | - | - | - | - |
| D[09-15] | 3/4 | - | - | - | - | - | - | - | - |
| D[16-31] | 3/4 | - | - | - | - | - | - | - | - |

**Table 3-5 Configuration Pin List (2 of 2)**

| Pin Name | Bank | Master CPU | | Slave CPU | |
|---|---|---|---|---|---|
| | | X8 | X16 | X8 | X16 |
| MODE [3:0] | 7 | X001 | X001 | X110/X111 | X110/X111 |
| MODE [2:0] | 7 | 100 | 100 | 110 | 110 |
| MODE [1:0] | 7 | M[1:0]=00 | M[1:0]=00 | M[1:0]=10 | M[1:0]=10 |
| RECONFIG_N | 10 | √ | √ | √ | √ |
| READY | 10 | √ | √ | √ | √ |
| DONE | 10 | √ | √ | √ | √ |
| TCK | 10 | TCK | TCK | TCK | TCK |
| TMS | 10 | TMS | TMS | TMS | TMS |
| TDI | 10 | TDI | TDI | TDI | TDI |
| TDO | 10 | TDO | TDO | TDO | TDO |
| CCLK | 10 | CCLK | CCLK | CCLK | CCLK |
| CFGUP | 11、 | √ | √ | √ | √ |
| PUDC_B | 3/4 | √ | √ | √ | √ |
| EMCCLK | 3/4 | EMCCLK | EMCCLK | - | - |
| CSI_B | 3/4 | CSI_B | CSI_B | CSI_B | CSI_B |
| DOUT_CSO_B | 3/4 | CSO_B | CSO_B | CSO_B | CSO_B |
| RDWR_B | 3/4 | RDWR_B | RDWR_B | RDWR_B | RDWR_B |
| MCS_N | 3/4 | - | - | - | - |
| D00_MOSI | 3/4 | D00 | D00 | D00 | D00 |
| D01_DIN | 3/4 | D01 | D01 | D01 | D01 |
| D02 | 3/4 | D02 | D02 | D02 | D02 |
| D03 | 3/4 | D03 | D03 | D03 | D03 |
| SSPI_CS_N | 3/4 | - | - | - | - |
| D05_SI | 3/4 | D05 | D05 | D05 | D05 |
| D06_SSPI_CLK | 3/4 | D06 | D06 | D06 | D06 |
| D07_SSPI_WPN | 3/4 | D07 | D07 | D07 | D07 |
| D08_SO | 3/4 | - | D08 | D08 | D08 |
| CLKHOLD_N | 3/4 | - | - | - | - |
| D04 | 3/4 | - | D04 | D04 | D04 |
| D[09-15] | 3/4 | - | D[09-15] | - | D[09-15] |
| D[16-31] | 3/4 | - | - | - | - |

The configuration pins are as shown in Table 3-6.

**Table 3-6 Pin Definitions**

| Pin Name | Functional Description |
|---|---|
| MODE | Configuration mode selection pin.<br>As the selection pin of configuration modes, MODE is an input pin that has internal weak pull-up. The maximum bit width is 3 bits.<br>After FPGA powers up or a low pulse triggers RECONFIG_N, the device enters the corresponding configuration mode in accordance with the MODE value. The same MODE value of the different GOWIN FPGA products may have different configuration MODE. As the number of pins for each package is different, some MODE pins are not all bonded out, and the unbound MODE pins are grounded by default. Please refer to the corresponding PINOUT manual for further details.<br>When MODE pins are used as GPIOs, they can be used as an input or output type.<br>**Note!**<br>Note that when the MODE value changes, power-on again or providing one low pulse for triggering RECONFIG_N is required for it to take effect. |
| RECONFIG_N | As a configuration pin, RECONFIG_N is an input pin that has an internal weak pull-up. Active low, it is used to reconfigure the FPGA during programming configuration. FPGA can't be configured if RECONFIG_N is set to low. Keep high-level during power-on and configuration until the device configuration is complete.<br>As a configuration pin, a low level signal with pulse width no less than 25ns is required for GowinCONFIG to reload bitstream data according to the MODE setting value. You can control the pin by writing logic to trigger the device to reconfigure as required. In the case of user logic control, ensure that the pin is kept high during power-on and configuration.<br>**Note!**<br>● The RECONFIG_N pin cannot be reused as a GPIO.<br>● If you need to trigger RECONFIG_N through internal FPGA logic, you can connect a GPIO (with I/O standard of LVCMOS10/LVCMOS12/LVCMOS15/LVCMOS18/LVCMOS25/LVCMOS33) to RECONFIG_N via external circuitry. During power-up and configuration, this GPIO must remain in a high-impedance or pull-up state. |
| READY | Inout pins. Internal weak pull-up, open-drain output. Active-high. FPGA can be configured only when the READY signal is pulled up.<br>It indicates that the FPGA can be configured or not. If the FPGA meets the configuration condition, the READY signal is high. If the power-on or reset process is incomplete, READY signal is low.<br>Users can delay the active configuration by pulling down the READY signal externally.<br>As a GPIO, it can be reused as an input or output type. If READY is used as an input GPIO, ensure that it’s not pulled down during the power-on and configuration process. Otherwise, The configuration may not work properly. |
| DONE | Inout pins. Internal weak pull-up, open-drain output. It indicates FPGA is configured successfully or not. DONE is pulled up after successfully configuring.<br>As an output configuration pin, it indicates whether the FPGA configuration is successful:<br>● If DONE is high, the device has been awakened and enters into the working state.<br>● If DONE is low, the configuration process is incomplete or fails. |

| Pin Name | Functional Description |
|---|---|
| | Users can delay the wake up process by pulling down the DONE signal externally.<br>When RECONFIG_N or READY signals are low, DONE signal also keeps low. When configuring SRAM using JTAG circuit, it does not need to take DONE signal into account.<br>As a GPIO, it can be used as an input or output pin. If DONE is used as an input GPIO, ensures that it is not pulled down externally during power-on and configuration process. Otherwise, the FPGA will fail to enter the user mode after configuration. |
| TCK | As a configuration pin, it is an input pin.<br>It is a serial clock input pin in the JTAG configuration mode.<br>As a GPIO, it can be used as an input or output pin.<br>**Note!**<br>As a GPIO, ensure that the pin status is stable during the power-on and loading process to prevent the JTAG command from being triggered by mistake. |
| TMS | As a configuration pin, it is an input pin with internal weak pull-up.<br>It is a serial input pin in JTAG configuration mode. As a GPIO, it can be used as an input or output pin. |
| TDI | As a configuration pin, it is an input pin with internal weak pull-up.<br>It is a serial data input pin in JTAG configuration mode. As a GPIO, it can be used as an input or output pin. |
| TDO | As a configuration pin, it is an output pin.<br>It is a serial data output pin in JTAG configuration mode. As a GPIO, it can be used as an input or output pin. |
| CCLK | As a configuration clock pin, CCLK runs the synchronous FPGA configuration sequence in all modes except JTAG and SSPI mode.<br>In slave mode: CCLK is an input and requires connection to an external clock source.<br>In master mode: CCLK is an output as configuration source clock.<br>**Note!**<br>CCLK is the key clock signal, so good signal integrity must be ensured. |
| PUDC_B | As a configuration pin, it is an input pin.<br>When PUDC_B is low, the internal pull-up resistors are enabled on all GPIO during device configuration.<br>When PUDC_B is high, the internal pull-up resistors are disabled on all GPIOs during device configuration.<br>PUDC_B must be tied to VCCO3/4 or GND directly or via a 1 kΩ (or stronger) resistor. |
| EMCCLK | As a configuration pin, it is an input pin. Used to configure the optional external clock input in a master mode (versus the internal configuration oscillator). For master modes: FPGA can optionally switch to EMCCLK as the clock source.<br>For JTAG and slave modes: EMCCLK is ignored and can be left unconnected. |
| CSI_B | As a configuration pin, it is an input pin. It is a chip selection input signal in the CPU mode, active low.<br>For CPU master mode, tie to GND directly or via a 1 kΩ (or less) resistor.<br>For CPU slave mode: An external configuration controller can control CSI_B for selecting the active FPGA on the bus, or in a daisy-chain configuration, connect to the CSO_B pin of the upstream FPGA. |
| CSO_B | As a configuration pin, it is an output pin. It is a chip selection input signal in the CPU mode. It connects to the CSI_B pin of the downstream FPGA in a daisy-chain |

| Pin Name | Functional Description |
|---|---|
| | configuration. |
| DOUT | As a configuration pin, it is an output pin. DOUT is the data output for a serial configuration daisy-chain.<br>For Serial and SPI (x1 only) modes: Connect to the DIN of the downstream FPGA in a serial configuration daisy-chain, as the data input of the following device. |
| RDWR_B | As a configuration pin, it is an input pin.<br>As a Read/Write enable selection pin in CPU mode: it refers to Read when RDWR_B is high and Write when RDWR_B is low.<br>As a GPIO, it can be used as an input or output pin. |
| MCS_N | As a configuration pin, it is an output pin.<br>It is a chip selection signal in MSPI configuration mode, active low.<br>As a GPIO, it can be used as an input or output pin. |
| MOSI | As a configuration pin, it is an output pin. Connects to the SI pin of the external Flash. The SPIx2 x4 line is bidirectional.<br>Serial data output pin in MSPI configuration mode.<br>As a GPIO, it can be used as an input or output pin. |
| MISO | As a configuration pin, it is an input pin. Connects to the SO pin of the external Flash. The SPIx2 x4 line is bidirectional.<br>It is a serial data input pin in MSPI configuration mode.<br>As a GPIO, it can be used as an input or output pin. |
| MI2 | As a configuration pin, it is an output pin. The SPIx4 line is bidirectional.<br>MSPI write protection pin: When the output is high, the MSPI operation is valid; When the output level is low, the MSPI operation is invalid. The $V_{CCIO}$ of the corresponding bank can be pulled up through the 4.7k resistor.<br>As a GPIO, it can be used as an input or output pin. |
| MI3 | As a configuration pin, it is an output pin, internal weak pull-up. The SPIx4 line is bidirectional.<br>MSPI clock holding pin: active-low. The $V_{CCIO}$ of the corresponding bank can be pulled up through the 4.7k resistor.<br>As a GPIO, it can be used as an input or output pin. |
| DIN | As a configuration pin, it is an input pin. It is a serial data input pin.<br>For Serial and MSPI modes: DIN receives serial data from the data source and collects data at the CCLK rising edge in the default configuration.<br>For CPU modes, DIN is a multi-function pin that functions as the D01 data pin. As a GPIO, it can be used as an input or output pin. |
| D0~D31 | Inout pins<br>For CPU mode: D0~D31 are data in/out pins. The FPGA will automatically detect the data width of x8 or x16.<br>As a GPIO, it can be used as an input or output type. |
| SSPI_CS_N | As a configuration pin, it is an input pin. A 4.7k pull-up resistor to the corresponding Bank $V_{CCIO}$ is recommended.<br>It is a chip selection signal in the SSPI configuration mode, active low.<br>As a GPIO, it can be used as an input or output pin. |
| SSPI_CLK | As a configuration pin, it is an input pin. A 4.7k pull-up resistor to the corresponding Bank $V_{CCIO}$ is recommended.<br>It is a clock input pin of SSPI configuration mode.<br>As a GPIO, it can be used as an input or output pin. |
| SI | As a configuration pin, it is an input pin. |

| Pin Name | Functional Description |
|---|---|
| | It is a serial data input pin in the SSPI configuration mode.<br>As a GPIO, it can be used as an input or output pin. |
| SO | As a configuration pin, it is an output pin.<br>It is a serial data output pin in the SSPI configuration mode.<br>As a GPIO, it can be used as an input or output pin. |
| CLKHOLD_N | As a configuration pin, it is an input pin. The $V_{CCIO}$ of the corresponding bank can be pulled up through the 4.7k resistor.<br>SSPI clock holding pin: active-low.<br>As a GPIO, it can be used as an input or output pin. |
| SSPI_WPN | As a configuration pin, it is an input pin. The $V_{CCIO}$ of the corresponding bank can be pulled up through the 4.7k resistor.<br>A write protection pin in SSPI mode: SSPI is valid when the input is high, SSPI is invalid when the input is low.<br>As a GPIO, it can be used as an input or output pin. |

### Configuration Pin Multiplexing

To maximize the utilization of I/O, Gowin FPGA product support for setting the configuration pins as GPIO pins. Before any configuration operation is performed on all series of Gowin FPGA products after power up, all related configuration pins are used as configuration pins by default. After successful configuration, the device enters into user mode and reassigns the pin functions according to the multiplex options selected by the user.

**Note!**

When setting the pin reuse options, ensure the external initial connection state of the pins does not affect the device configuration.

The reuse options for the configuration pins are detailed in Table 3-7.

**Table 3-7 Pin Reuse Options**

| Name | Options | Description |
|---|---|---|
| JTAG PORT[1] | Default Status | TMS, TCK, TDI, and TDO are dedicated configuration pins. |
| | Set as GPIOs | TMS, TCK, TDI, and TDO are used as GPIOs after configuration. |
| CPU PORT | Default Status | CSI_B, CSO_B, RDWR_B, D[0- 31], and CCLK are dedicated configuration pins. |
| | Set as GPIOs | CSI_B, CSO_B, RDWR_B, D[0- 31], and CCLK are used as GPIOs after configuration. |
| SSPI PORT | Default Status | SSPI_CS_N, SSPI_CLK, SI, SO, CLKHOLD_N, and SSPI_WPN are dedicated configuration pins. |
| | Set as GPIOs | SSPI_CS_N, SSPI_CLK, SI, SO, CLKHOLD_N, and SSPI_WPN are used as GPIOs after configuration. |
| MSPI PORT | Default Status | MCS_N, DIN, MOSI, D02, D03, and CCLK are dedicated configuration pins. |
| | Set as GPIOs | MCS_N, DIN, MOSI, D02, D03, and CCLK are used as GPIOs after configuration. |
| SERIAL | Default Status | DIN, DOUT, and CCLK are dedicated configuration pins. |
| | Set as GPIOs | DIN, DOUT, and CCLK are used as GPIOs after configuration. |
| RECONFIG_N | Default Status | Dedicated configuration pins. |
| READY | Default Status | Dedicated configuration pins. |
| | Set as GPIOs | Used as GPIOs after configuration. |
| DONE | Default Status | Dedicated configuration pins. |
| | Set as GPIOs | Used as GPIOs after configuration. |

**Note!**

- [1] The JTAG_SEL_N signal can be controlled internally by logic to configure JTAG pins as GPIOs.
- [1] As a GPIO, ensures that the TCK/TMS is stable during the power-on and programming process to prevent the JTAG command from being triggered by mistake.

### Pin Reuse Configuration

Users can configure pin reuse via Gowin Software.

1. Open the corresponding project in Gowin Software;
2. Select “Project > Configuration > Dual-Purpose Pin” in the menu bar, as shown in Figure 3-1;
3. Check the corresponding options to set the pin reuse.

**Figure 3-1 Configuring Pin Reuse**

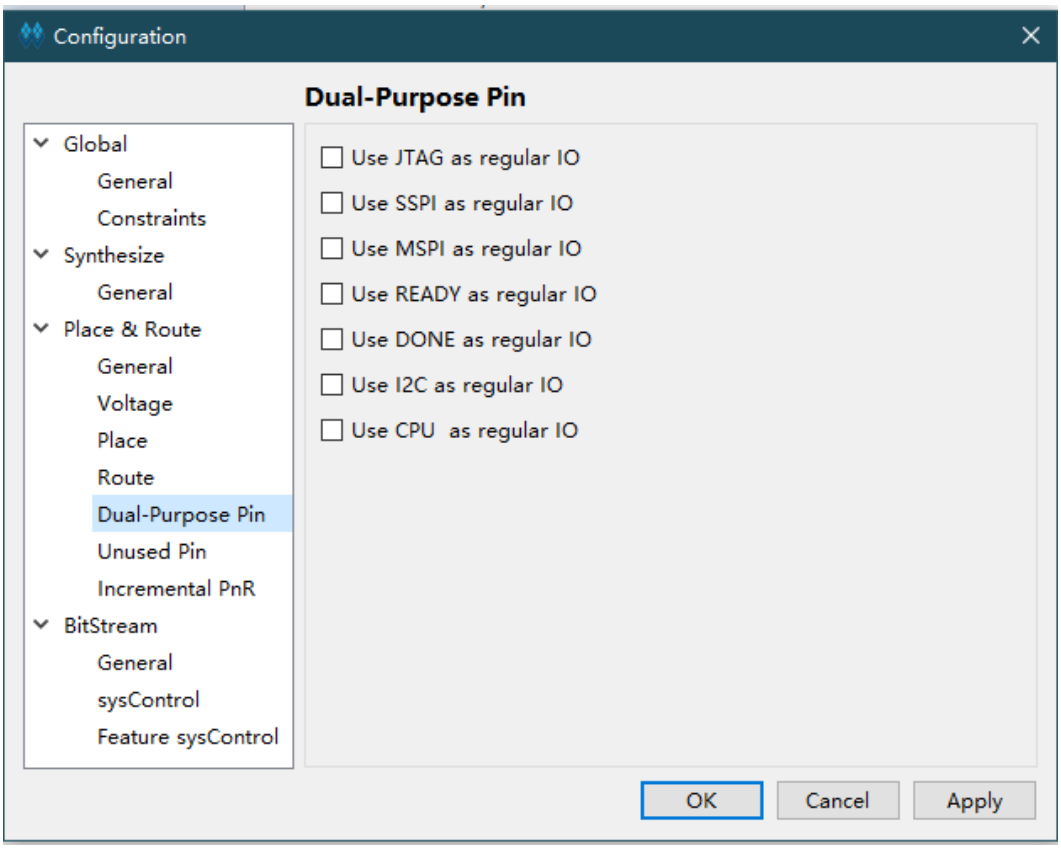

# 3.3 Configuration Clock for Master Modes

There are two options for the configuration clock in master modes (master CPU mode, master SERIAL mode, and master SPI mode): On-chip oscillator and external reference clock. On-chip oscillator is used as the clock source by default. After configured the emc_clk and EMC_CLK_DIV by the EDA tool, external clock can also be used as configuration clock source and contains multiple frequency division options. The configuration clock structure is as shown in the figure below.

**Figure 3-2 Configuration Clock Structure in Master Modes**

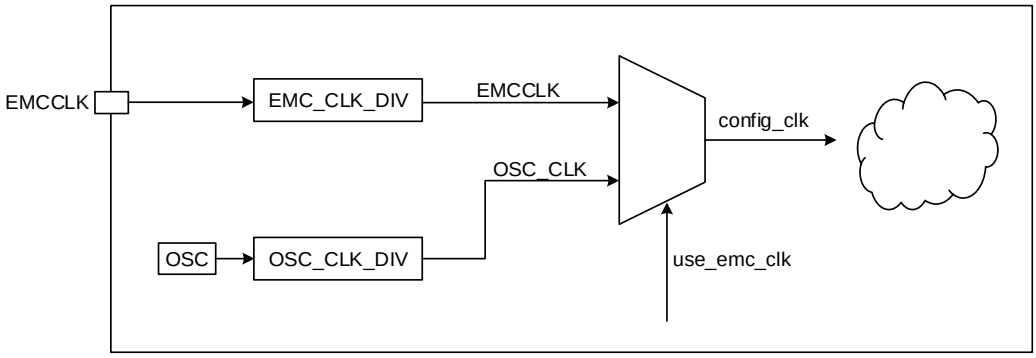


# 3.4 JTAG Configuration Mode

The JTAG configuration mode of Gowin FPGA products conforms to the IEEE1532 standard and the IEEE1149.1 boundary scan standard.

The JTAG configuration mode writes bitstream data to the SRAM of Gowin FPGA products. All configuration data is lost after the device is powered down. All Gowin FPGA products support the JTAG configuration mode.

## 3.4.1 Connection Diagram for the JTAG Configuration Mode

The connection diagram in the JTAG configuration mode is shown in Figure 3-3.

**Figure 3-3 Connection Diagram for JTAG Configuration Mode**

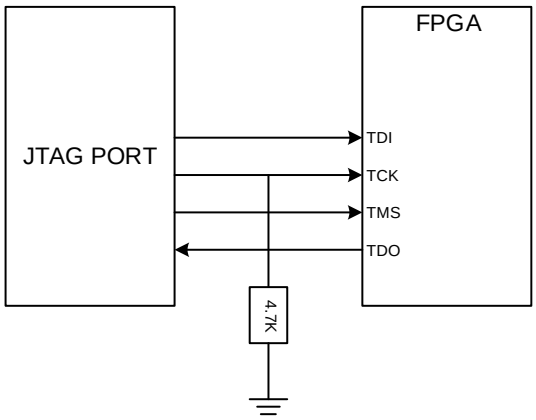


**Note!**

The clock frequency for JTAG configuration mode cannot be higher than 100MHz.

In addition to configuring SRAM, JTAG mode can also be used to program the external SPI Flash. Figure 3-4 shows the external SPI Flash programming.

**Figure 3-4 Connection Diagram of JTAG Programming External Flash**

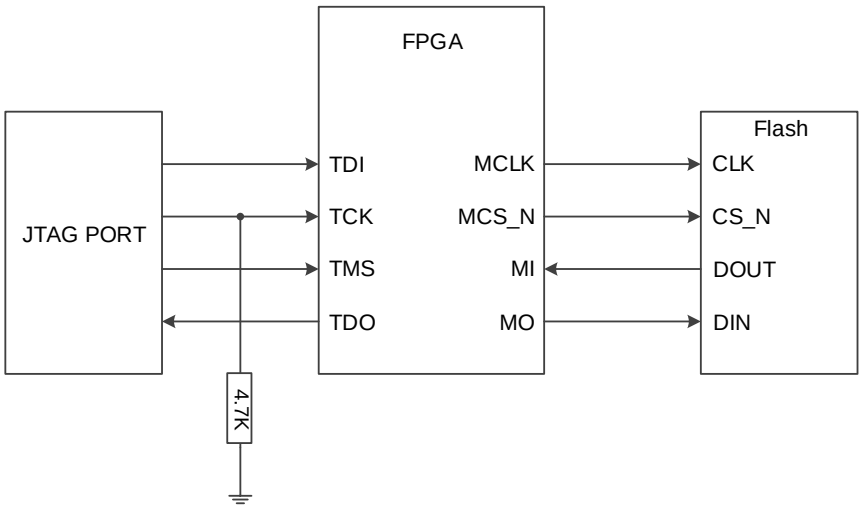


**Note!**

The figure above is the connection diagram of Programming External Flash via the JTAG interface.

## 3.4.2 JTAG Configuration Timing

See Figure 3-5 for the timing of JTAG mode.

**Figure 3-5 JTAG Configuration timing**

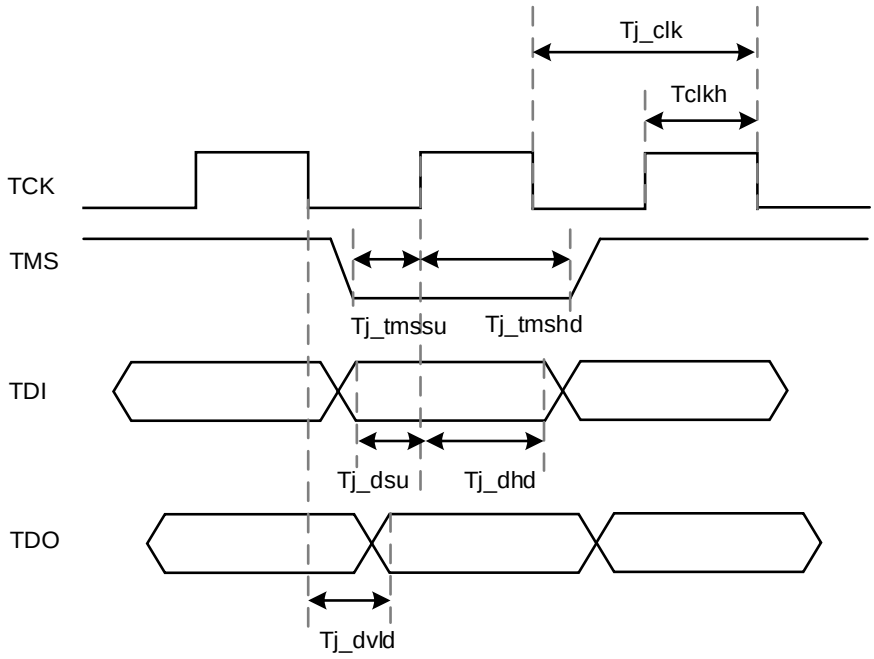


See Table 3-8 for the description of timing parameters.

**Table 3-8 JTAG Configuration Timing Parameters**

| Name | Description | Min. | Max. | Unit |
|---|---|---|---|---|
| $T_{j_clk}$ | JTAG TCK clock period | 10 | – | ns |
| $T_{j_tmssu}$ | TMS setup time | 3.0 | – | ns |
| $T_{j_tmshd}$ | TMS hold time | 0 | – | ns |
| $T_{j_dsu}$ | TDI setup time | 3.0 | – | ns |
| $T_{j_dhd}$ | TDI hold time | 0 | – | ns |
| $T_{j_dvld}$ | delay of TCK to TDO | – | 3.0 | ns |
| $T_{clkh}$ | The time of clock high level | (clock cycle ) *45% | (clock cycle) *55% | – |

## 3.4.3 JTAG Configuration Process

### JTAG Instructions

#### *TAP State Machine*

The state machine for the test access port is designed to select an instruction register or a data register to connect it between TDI and TDO. In general, the instruction register is used to select the data register to be scanned. In the state machine diagram, the number on the side of the arrow indicates the logic state of the TMS when the TCK goes high, as shown in Figure 3-6.

**Figure 3-6 TAP State Machine**

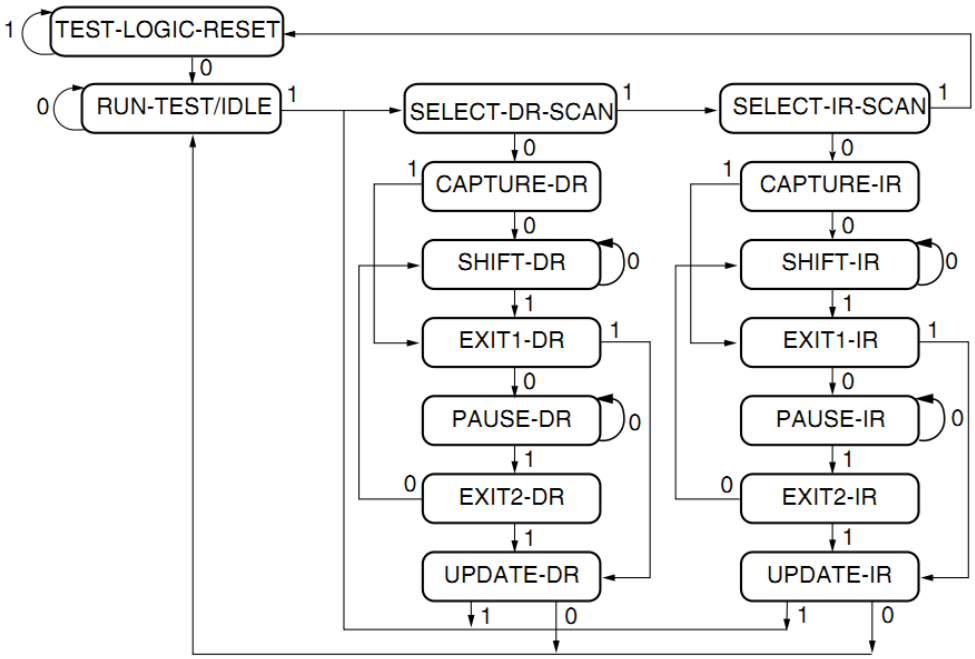

***TAP Reset***

After TMS keeps high (logic "1") and at least 5 strobes are input (higher and then low) at the TCK terminal, the TAP logic is reset, the TAP state machine in other states is converted into the state of test logic reset, and the JTAG port and the test logic are reset.

**Note!**

The CPU and peripherals are not reset in this state.

**Note!**

- The data on the TDO is valid from the falling edge of TCK in the Shift_DR or Shift_IR state;
- The data is not shifted in the Shift_DR or Shift_IR state;
- The data is shifted when exiting the Shift_DR or Shift_IR state;
- The first to be shifted is the least significant bit (LSB) of the data;
- Once reset, all instructions will be reset or disabled.

***Instruction Register and Data register***

In addition to the test logic reset, the state machine can also control two basic operations:

- Instruction register (IR) scan;
- Data Register (DR) scan.

During the IR scanning operation, in Shift_IR state, the data or instructions are sent to the IR in the LSB way. The lower data bits are sent first. The instructions will all be sent when the sate machine returns to Run-Test-Idle, as shown in Figure 3-7.

During the data register scanning operation, the data or instructions are sent to the DR in the Shift_DR state, as shown in Figure 3-8. The data is sent in LSB way or MSB way depending on specific operations.

**Figure 3-7 Instruction Register Access Timing**

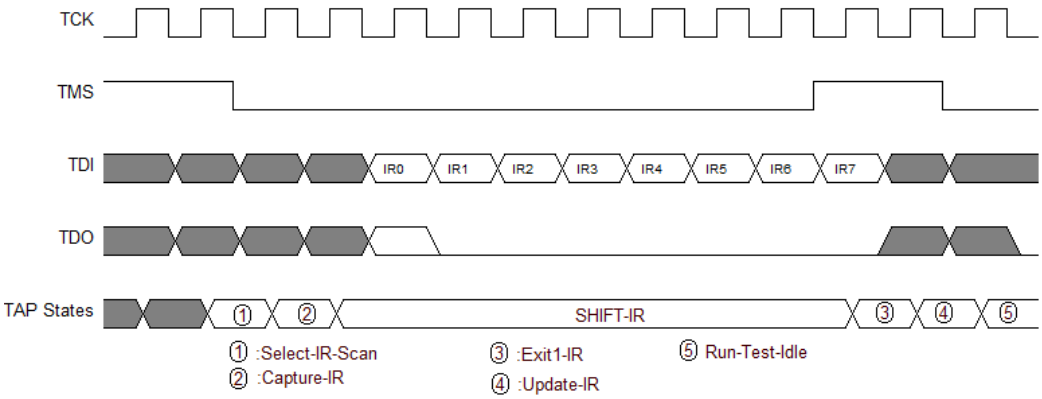

**Figure 3-8 Data Register Access Timing**

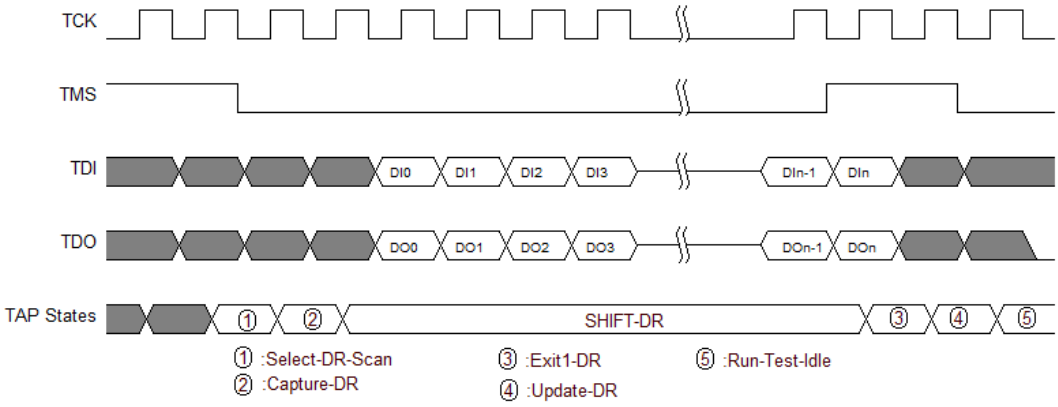


**Note!**

- The total length of the instruction register is 8 bits in Arora V FPGA products.
- The length of the data register may vary depending on the selected register.

***Read ID CODE Instance***

ID Code, i.e. JEDEC ID Code, is a basic identification of FPGA products.

The length of the Gowin FPGA ID Code is 32 bits. The ID Codes are listed in the table below.

**Table 3-9 V FPGA IDCODE**

| Device | IDCODE |
|---|---|
| GW5AT-60 | H0001481B |

The instruction to read FPGA is 0x11. Take the GW5AT-60 ID Code as an example to illustrate the working mode of JTAG, please refer to the following steps:

1. TAP reset: TMS is set to high level and at least 5 clock cycles are continuously transmitted;
2. Move the state machine from Test-Logic-Reset to Run-Test-Idle;
3. Move the state machine to Shift-IR. Send the Read ID instruction (0x11) beginning with LSB. When MSB (the last bit) is being sent, move state machine to Exit1-IR at the same time, i.e., TMS should be set high before sending MSB. Table 3-10 lists the change of TDI and TMS value during sending 0x11 in 8 clock cycles, as shown in Figure 3-10.

**Table 3-10 Change of TDI and TMS Value in The Process of Sending Instructions**

| Value \ TCK | TCK 1 | TCK 2 | TCK 3 | TCK 4 | TCK 5 | TCK 6 | TCK 7 | TCK 8 |
|---|---|---|---|---|---|---|---|---|
| TDI value (0x11) | 1 | 0 | 0 | 0 | 1 | 0 | 0 | 0 |
| TMS value | 0 | 0 | 0 | 0 | 0 | 0 | 0 | 1 |

4. Move the state machine, back to Run-Test-Idle after going from Exit1-

IR to Update-IR, and then run the state machine at least 3 clock cycles in Run-Test-Idle.

5. Move the state machine to Shift-DR, send 32 clock cycles, and set TMS to high level before the 32nd clock is sent. When the 32 clock cycles are completed, jump from Shift-DR to Exit1-DR. During this period, sending 32 clocks can read 32 bits data, that is, 0x0001481B, as shown in Figure 3-11.
6. Move the state machine back to Run-Test-Idle;

**Figure 3-9 Flow Chart of Reading ID Code State Machine**

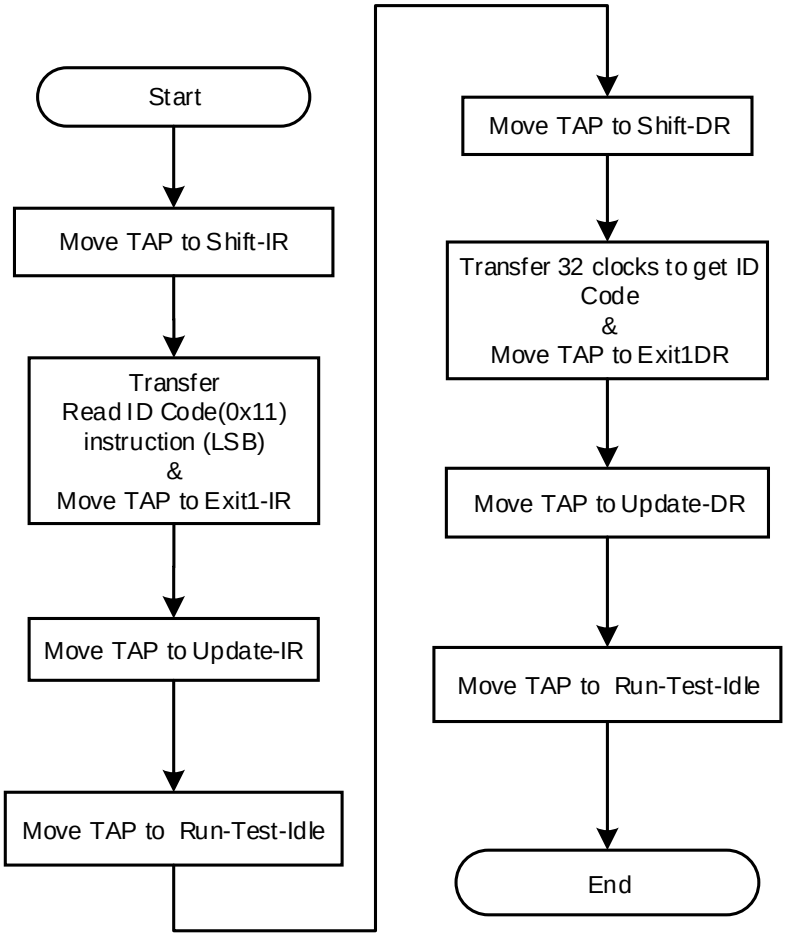

**Figure 3-10 Access Timing of Reading ID Code Instruction- 0x11**

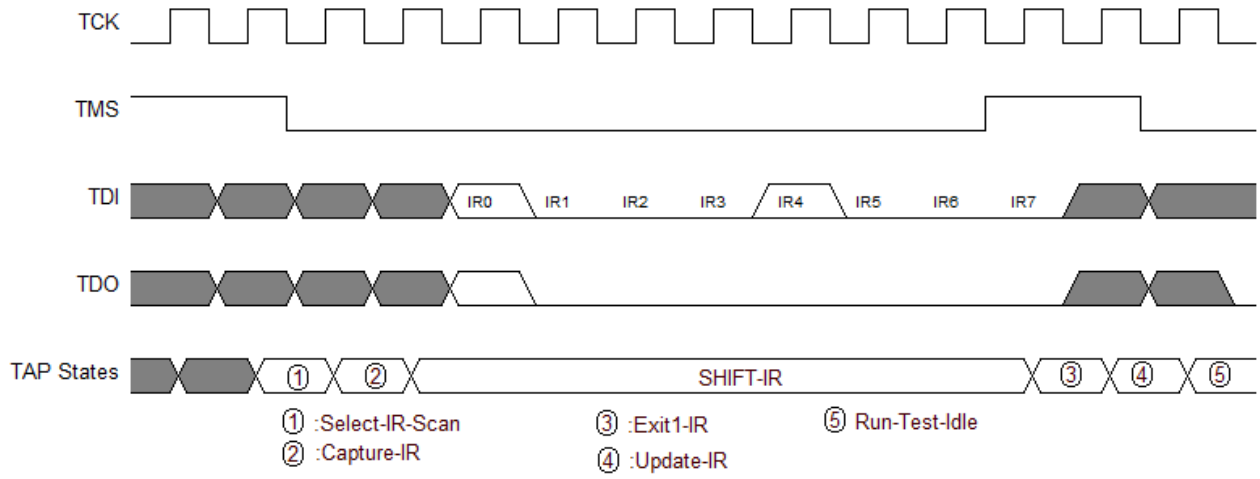


**Figure 3-11 Access Timing of Reading ID Code Data Register**

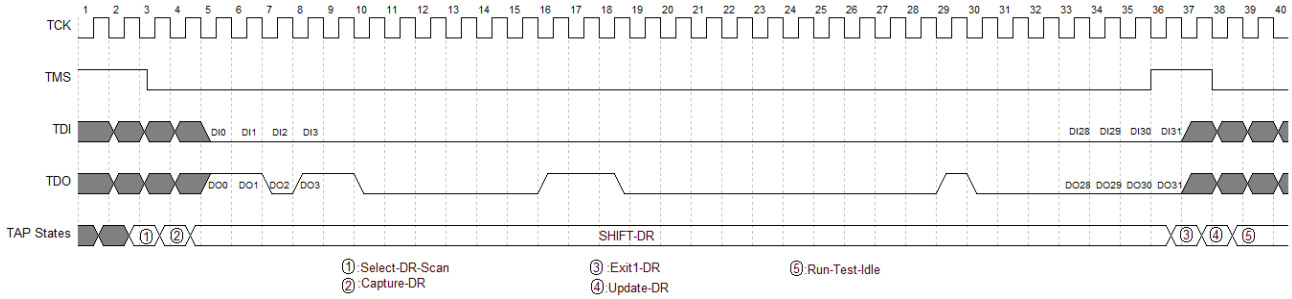


***Read Status Register 0x41***

Status Register is of great help in device debugging and observing device Status. Reading Status Register can preliminarily judge the Status of devices, such as whether wakeup is successful or not, whether there is a loading error, etc.

The Status Register is 32 bits. The read instruction is 0x41 and the timing is the same as that of Read ID Code.

For the meaning of the Status Register, please refer to 5.1 Status Register.

***Read User Code 0x13***

The user code is 32 bits. The read instruction is 0x13 and the timing is the same as that of Read ID Code.

The user code adopts the checksum value in the FS file by default. It can be redefined using Gowin Designer.

***Reload 0x3C***

This instruction is used to read the bitstream files from Flash and write to SRAM.

Send the instructions of Reprogram (0x3C) and Noop (0x02) to reload the device via JTAG. You can also reload the device by triggering the Reconfig_N pin.

### Erase SRAM

When reconfiguring SRAM, the existing SRAM needs to be erased. The flow is as follows:

1. Send the "0x15" instruction of ConfigDisble;
2. Send the "0x05" instruction of SRAM Erase;
3. Send the "0x02 " instruction of Noop;
4. Delay or Run Test 2~ 10ms;
5. Send the "0x09" instruction of SRAM Erase Done;
6. Send the "0x3A" instruction of ConfigDisabled;
7. Send the "0x02 " instruction of Noop to end the configuration process.

**Note!**

Enough time is required for the device to finish erasing after the instructions of EraseSram(0x05) and Noop(0x02) are sent.

### SRAM Configuration

The FPGA SRAM is configured using an external Host to enable the FPGA functions. SRAM is configured via JTAG to avoid the influence of Configuration Mode Pins.

Generate the FS file using Gowin software. Configure SRAM using JTAG. The process of SRAM configuration using the external Host is as follows, as shown in Figure 3-12.

1. Establish a JTAG link and reset TAP;
2. Read the device ID CODE and check if it matches.
3. Erase the SRAM if it has been configured. Please refer to “Erase SRAM” for the detailed flow.
4. Send the "0x15" instruction of ConfigDisble;
5. Send the "0x12" instruction of Address Initialize;
6. Send the "0x17" instruction of Transfer Configuration Data.
8. Move the state to Shift-DR (Data Register). Send Bitstream Data from the MSB bit by bit till all the bitstream file content is sent, and then return to run-test-idle state;
9. Send the "0x3A" instruction of ConfigDisabled;
7. Send the "0x02 " instruction of Noop to end the configuration process.

**Figure 3-12 SRAM Configuration Flow**

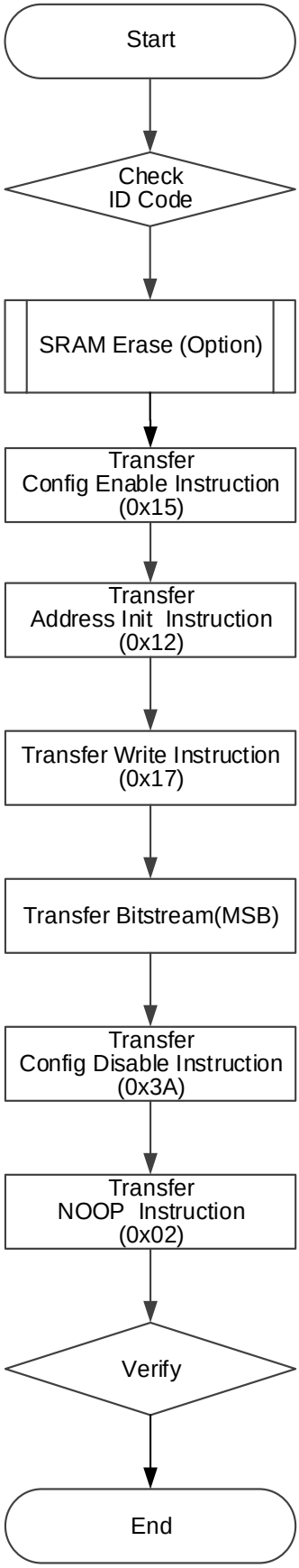

## ExFlash Programming

### *Program External Flash via JTAG-SPI*

In this mode, users can simulate Master SPI timing to program SPI Flash via the JTAG interface. TMS corresponds to CS signal, TCK to SCLK signal, TDI to SI signal, and TDO to SO signal. Please refer to the figure below for the flow of programming Flash in this mode.

**Figure 3-13 Process View of Programming SPI Flash**

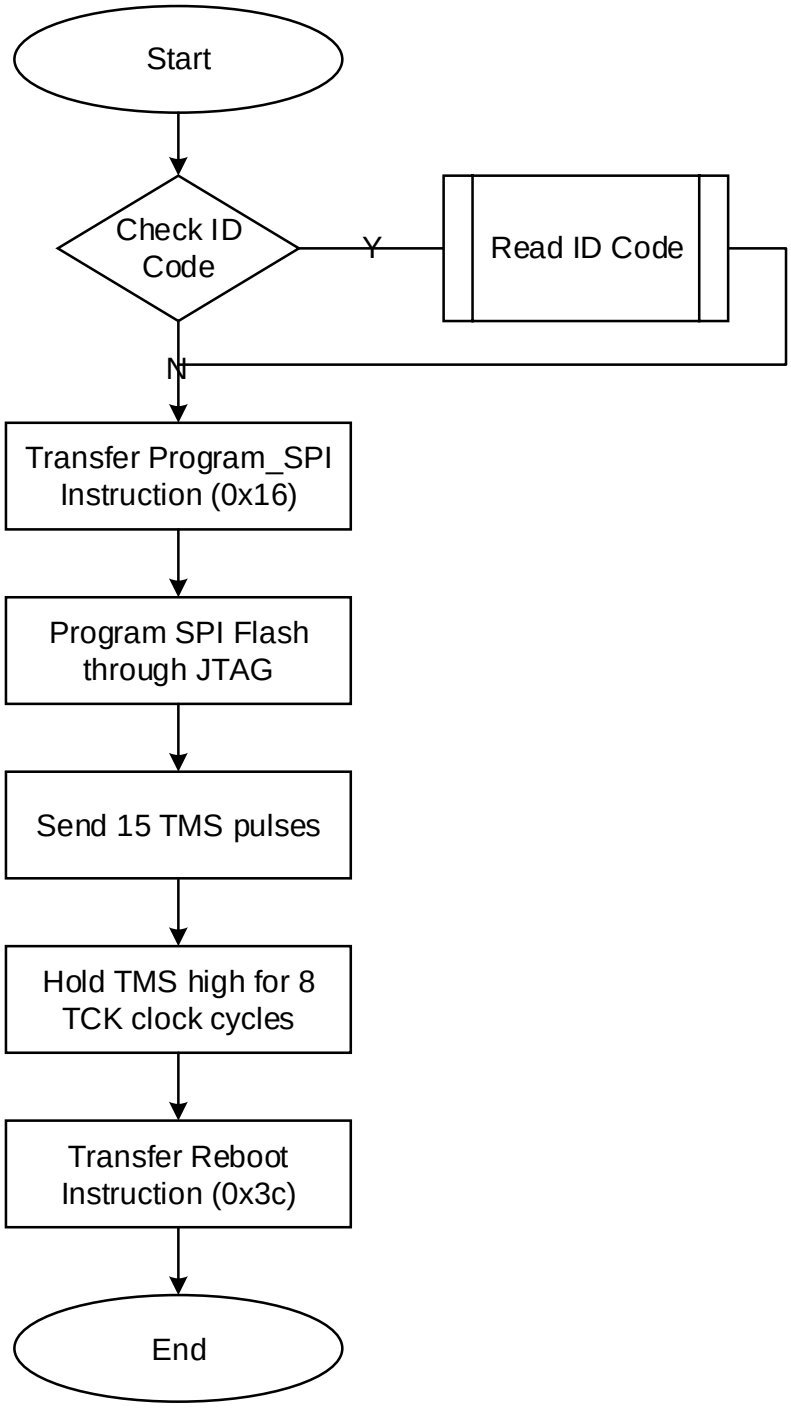

**Figure 3-14 Timing diagram of JTAG- SPI Sending 0x06 (Arora Ⅴ)**

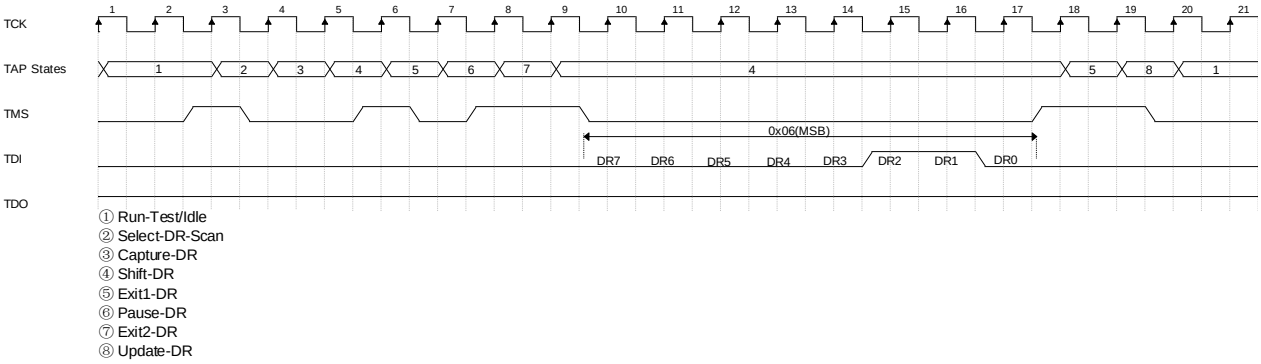


***SVF (Serial Vector Format) Programming External Flash***

SVF is a syntax specification describing high-level IEEE 1149.1 (JTAG) bus operations. SVF describes JTAG chain operations in a compact and portable form. SVF files record JTAG operations by describing the information that needs to be moved into the device chain. The programming tool uses an SVF file as input and programs Flash using the information contained in the SVF file. Please refer to the figure below for the flow of programming Flash in this mode.

**Figure 3-15 Process of Program ming Flash in SVF Mode**

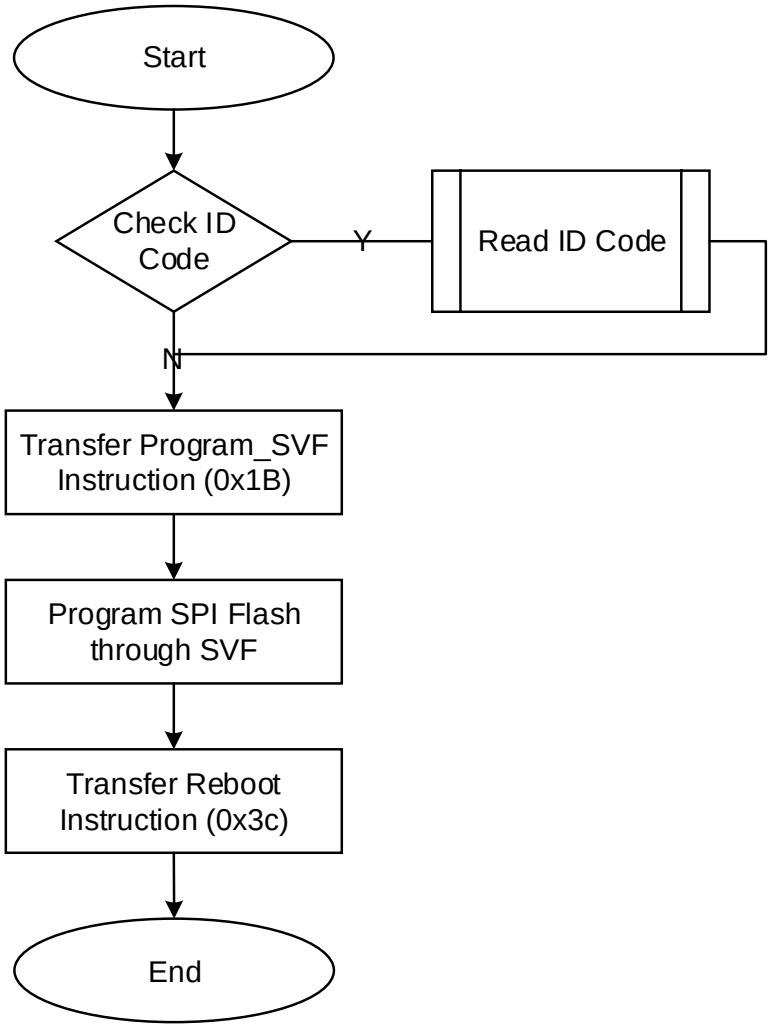

### OTP Configuration

Arora V FPGA products supports one-time programming and provides 128 Bit OTP space. Bit0 ~ Bit31 is the user space, which can be used to store security and other important information. Bit32~Bit95 is the DNA space, which stores the 64-bit unique identification information of the device.

For OTP definition, please refer to 5.2 OTP Efuse.

The configuration flow is as shown in the figure below.

**Figure 3-16 OTP Configuration Flow**

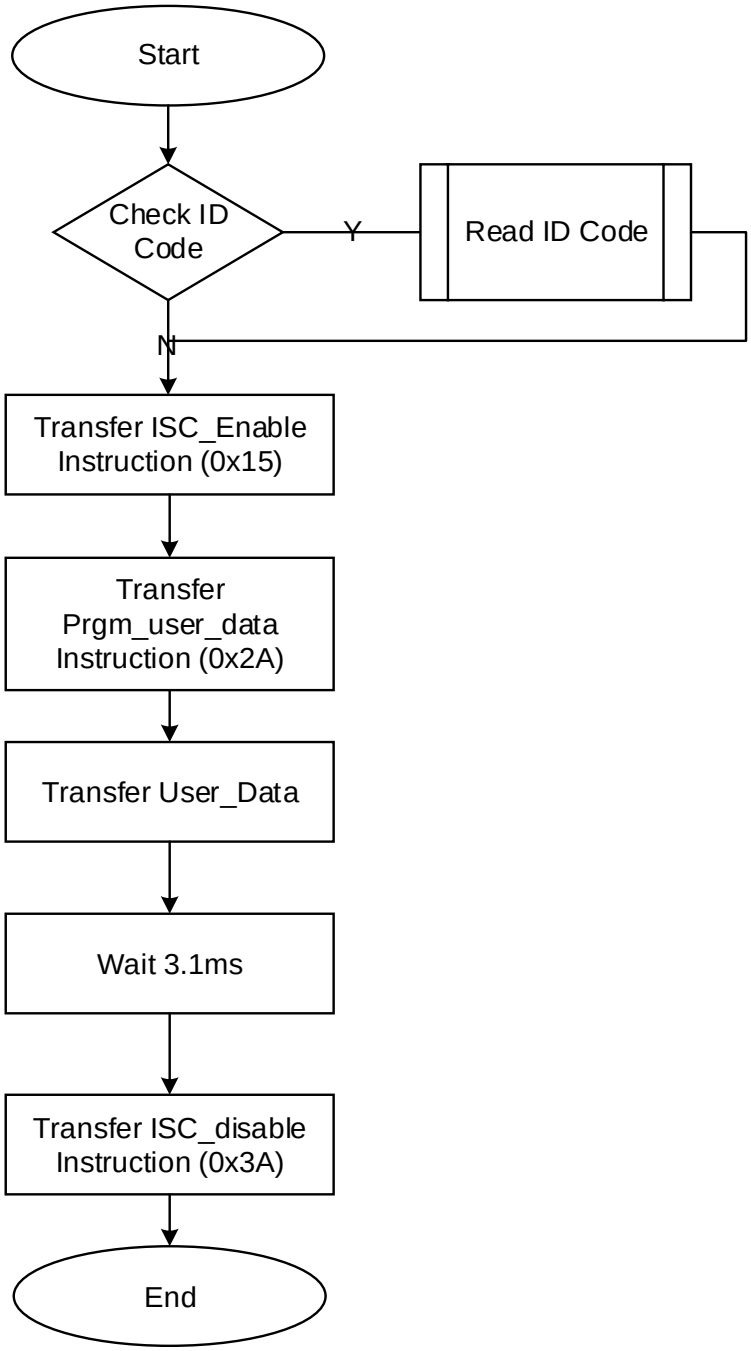

### Read OTP

The process of reading data is as shown in the figure below.

**Figure 3-17 Process of reading OTP**

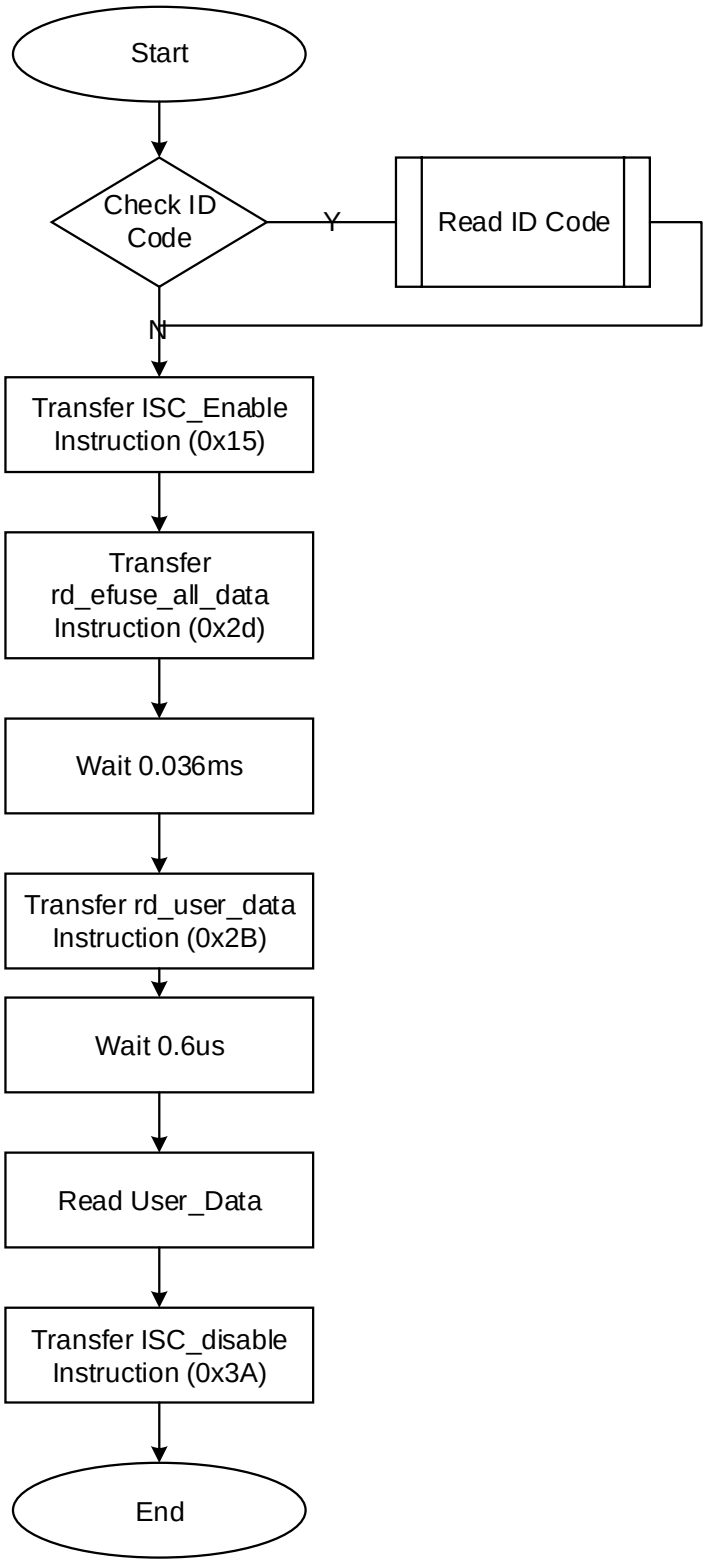


### Routine File

For the routine file, please contact GOWINSEMI technical support or

the local office.

# 3.5 SSPI Configuration Mode

In SSPI (Slave SSPI) mode, FPGA is a slave device and is configured via SPI by an external Host.

## 3.5.1 Connection Diagram for SSPI Configuration Mode

The connection diagram for configuring Gowin FPGA products via SSPI is shown in Figure 3-18.

**Figure 3-18 SSPI Configuration Mode Connection Diagram**

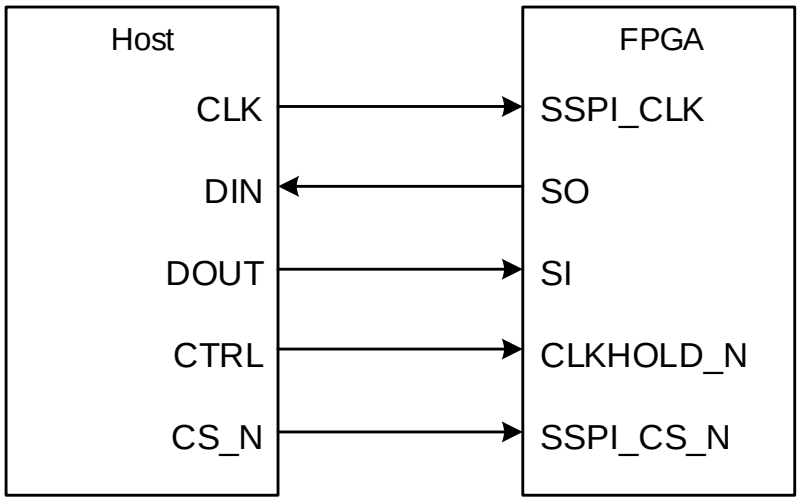


The connection diagram for configuring multiple FPGA products via SSPI is shown in Figure 3-19.

**Figure 3-19 Multiple FPGA Connection Diagram**

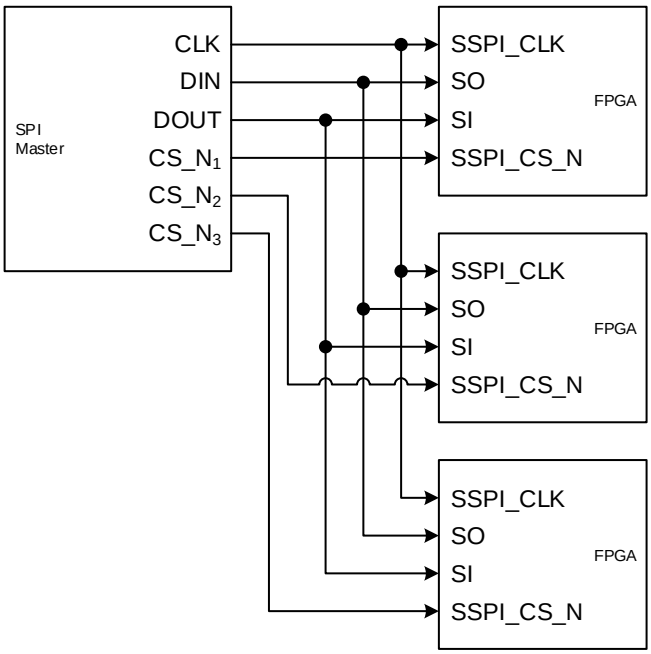


In addition to SRAM, SSPI can be used to program external SPI

Flash. The MODE value of the Flash programming is the same as that of SSPI configuration mode. Configuration data can be written to SRAM or an external Flash using Gowin programmer. Before loading from the external Flash, the MODE value should be adjusted to MSPI MODE, and then the MSPI loading can be triggered by powering on again or triggering RECONFIG_N.

The connection diagram for programming an external Flash via SSPI is shown in Figure 3-20.

**Figure 3-20 Connection Diagram of Programming External Flash via SSPI**

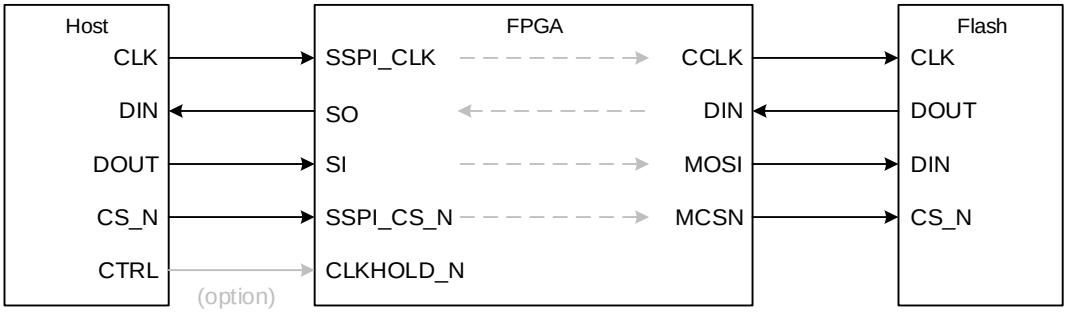

## 3.5.2 SSPI Configuration Timing

After power-up, when the MODE value is set to MSPI configuration mode, the FPGA will use MSPI mode to load the configuration data. Regardless of the success or failure of the MSPI loading, the FPGA will automatically switch to SSPI mode afterward.

It is recommended to use a 4.7k pull-up resistor to the corresponding Bank VCCIO on the SSPI_CLK and SSPI_CS_N pins.

**Figure 3-21 SSPI Configuration Process Timing**

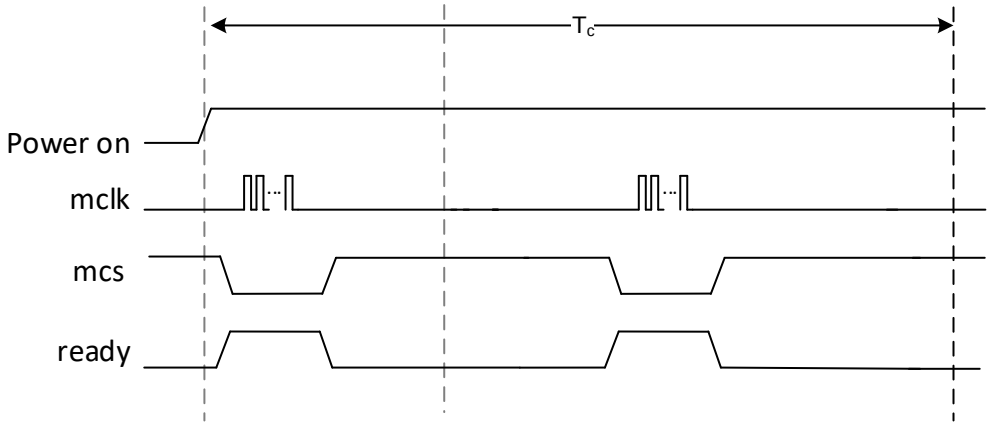


| Name | Description | Typ. | Unit |
|---|---|---|---|
| Tc | SSPI mode process time | 32 | ms |

See Figure 3-22 for the SSPI timing.

**Figure 3-22 SSPI Configuration Timing**

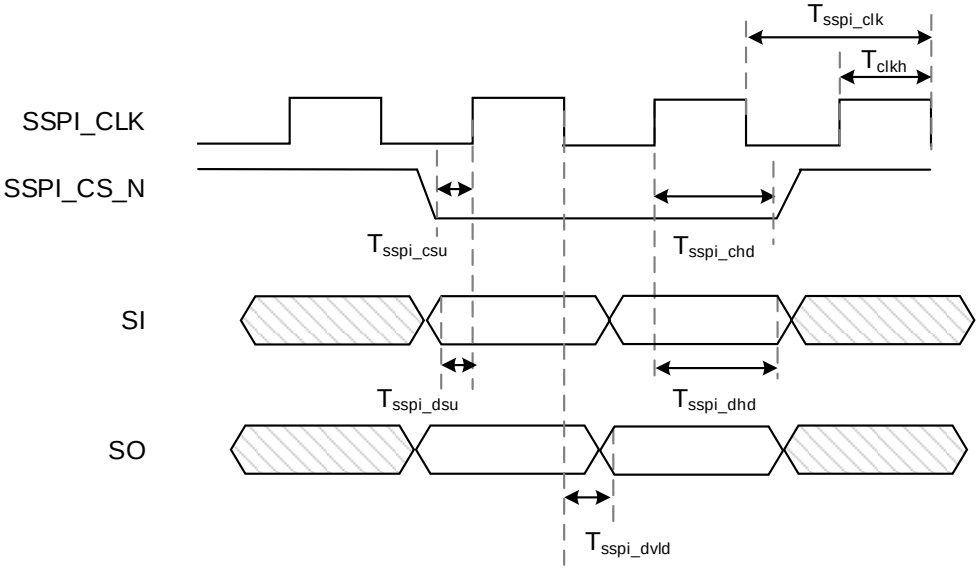


See Table 3-11 for the SSPI configuration timing parameters.

**Table 3-11 SSPI Configuration Timing Parameters**

| Name | Description | Min. | Max. | Unit |
|---|---|---|---|---|
| $T_{sspi_clk}$ | SSPI port clock period | 10.0 | – | ns |
| $T_{sspi_csu}$ | sspi_enablen setup time | 1.0 | – | ns |
| $T_{sspi_chd}$ | sspi_enablen hold time | 0 | – | ns |
| $T_{sspi_dsu}$ | SSPI input data setup time | 1.0 | – | ns |
| $T_{sspi_dhd}$ | SSPI input data hold time | 0 | – | ns |
| $T_{sspi_dvld}$ | delay of SSPI clock to output data | – | 1.0 | ns |
| $T_{clkh}$ | The time of clock high level | (clock cycle ) *45% | (clock cycle) *55% | – |

Other than the power requirements, the following conditions need to be met to use the SSPI configuration mode:

- Initiate a new configuration
  Power up again or trigger the RECONFIG_N pin at one low pulse.

## 3.5.3 SSPI Configuration Instructions

In Slave SPI mode, FPGA SRAM can be configured via SSPI or reading ID information on ID CODE\USER CODE\STATUS CODE in SRAM. External memory can also be programmed (Such as SPI Flash).

The SSPI instruction of FPGA is generally composed of 1-4 bytes, including at least 1 instruction class byte and multiple redundant information bytes. If there is no specified information byte, the redundant information byte can be any number (0x00 is used in the following table)

**Table 3-12 Configuration Instruction**

| Name | Complete Instruction (Instruction Byte + Redundant Information Byte) |
|---|---|
| Read ID Code | 0x11000000 |
| Read User Code | 0x13000000 |
| Read Status Code | 0x41000000 |
| Reconfig/Reprogram | 0x3C00 |
| Write Enable | 0x1500 |
| Write Disable | 0x3A00 |
| Write Data | 0x3B |
| Program SPI Flash | 0x1600 |
| Init Address | 0x1200 |
| Erase SRAM | 0x0500 |
| Reinit | 0x3F00 |

### Read ID Code

The length of FPGA ID Code is 32bits. The instruction to read ID is four Bytes, that is 0x11000000. Before sending instructions, keep CS at a high level and generate multiple clocks (more than two) to let FPGA get CS state.

After CS is pulled down, the instruction of 0x11000000 is written in in MSB way and after this, 32 clocks are generated continuously. At this time, the ID CODE data will be successively shifted out of DO in the form of MSB.

**Figure 3-23 Read ID Code Timing**

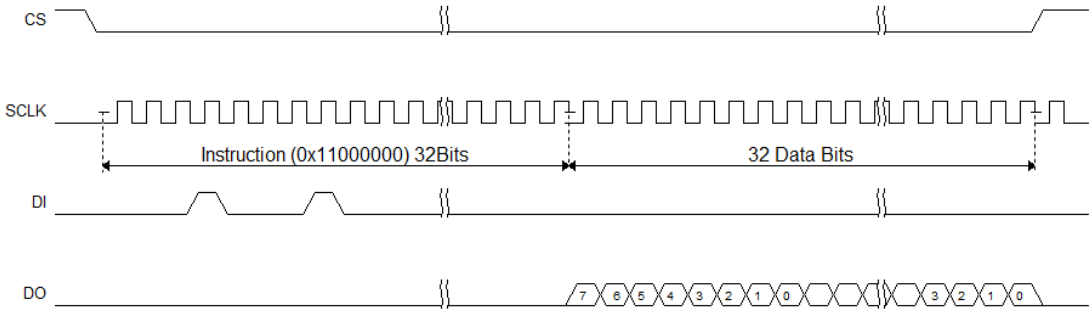


Operations of reading StatusCode / UserCode are similar with the operation of reading ID Code, simply replacing the related instructions.

### Write Enable (0x1500)

Before configuring SRAM (write Features), enter programming mode using “Write Enable (0x15)” instruction to receive the “WriteData (0x3B)” write data instructions.

**Figure 3-24 Write Enable (0x15) Timing**

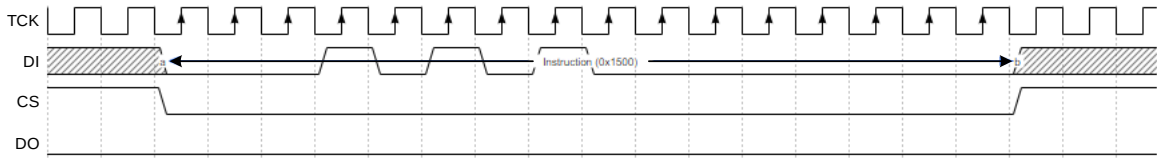


### Write Disable (0x3A00)

After data is sent, you can run the Write Disable command to exit editing mode. After exiting, the device can be awakened to enter the working state.

**Figure 3-25 Write Disable(0x3A00) Timing**

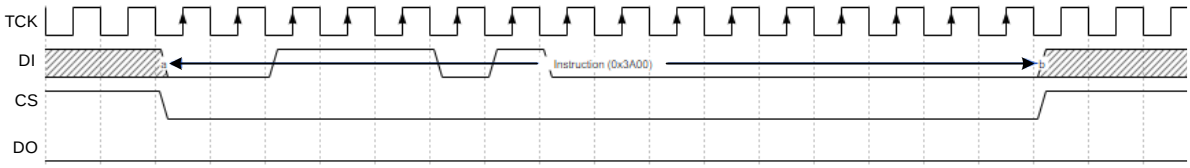

The timing of 0x1500 and 0x3A00 is basically the same. Instructions start at CS low level and the CS is pulled up after the instruction transmission is completed. Instructions following this timing are as follows: 0x3C00 (Reconfig / Reprogram), 0x1500(Write Enable), 0x3A000(Write Disable), 0x1600(Program SPI Flash), 0x1200(Init Address), 0x0500(Erase SRAM).

### Erase SRAM(0x0500)

The instruction timing is consistent with that of WriteEnable/WriteDisable, and only the instruction content needs to be replaced with “0x0500”.

When the instruction is sent, at least 10ms is required to execute it.

### Write Data (0x3B)

The fs file is sent directly to the FPGA device using the” WriteData (0x3B)” instruction.

Note that CS keeps low level in the process of data writing.

**Figure 3-26 Write Data (0x3B) Timing**

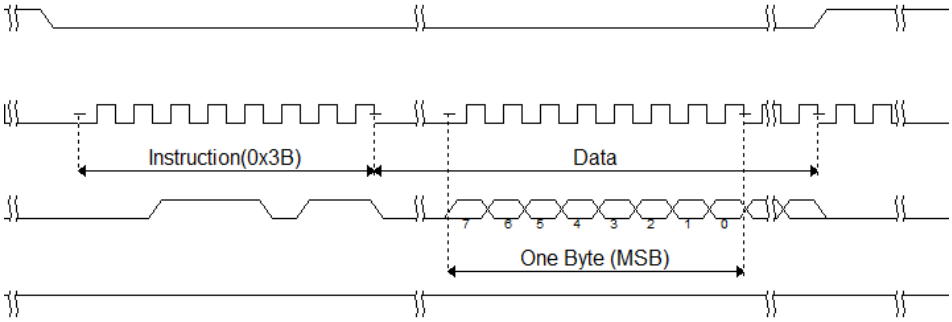

## 3.5.4 SRAM Configuration via SSPI

**Figure 3-27 The Flow Chart of SRAM Configuration via SSPI**

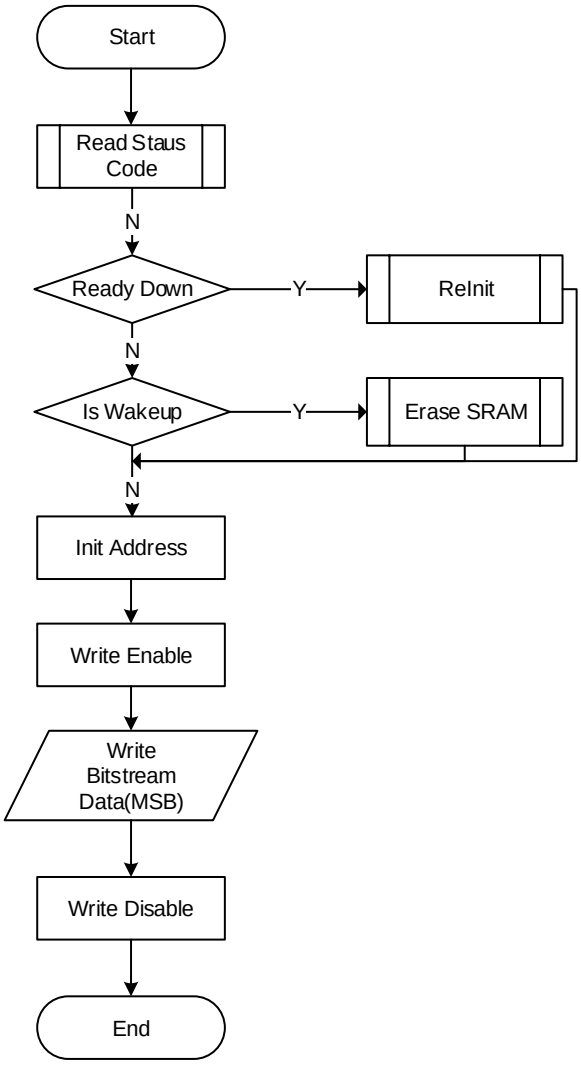


## 3.5.5 Flash Programming via SSPI

Figure 3-28 shows the programming flow. First, sends the "Program SPI Flash" (0x1600) instruction to FPGA via SSPI. After this, the FPGA can forward SSPI to Flash, and the SSPI on the Host side can directly access Flash. Then, it can be programmed according to Flash timing.

It is recommended to use a 4.7k pull-up resistor to the corresponding Bank VCCIO on the SSPI_CLK and SSPI_CS_N pins.

Note that when reading data from Flash, the data being read back is delayed by one Bit. For example, when SSPI reads Flash's IDCode, it needs to send an extra Clock to get the last bit.

**Figure 3-28 The Flow Chart of Programming Flash via SSPI**

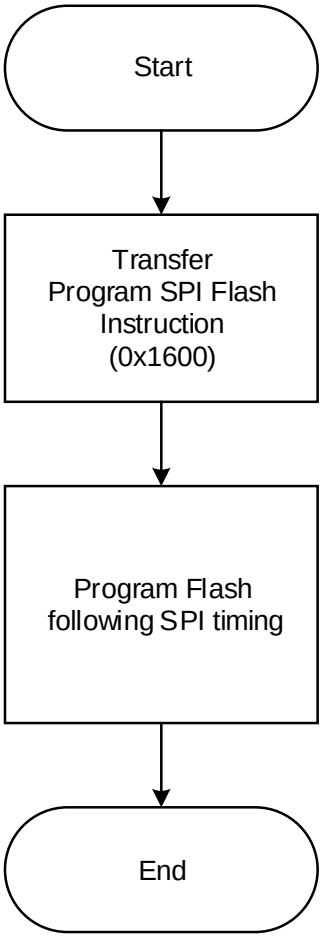

### 3.5.6 SRAM Configuration via SSPIx4

The SRAM configuration process via SSPI mode is as follows. The Read Status, Reinit, EraseSram, InitAddress, WriteEnable, and WriteDisble commands are the same with those of SSPI. Only Write Data uses the QSSPI command.

**Figure 3-29 The Flow Chart of SRAM Configuration via QSSPI**

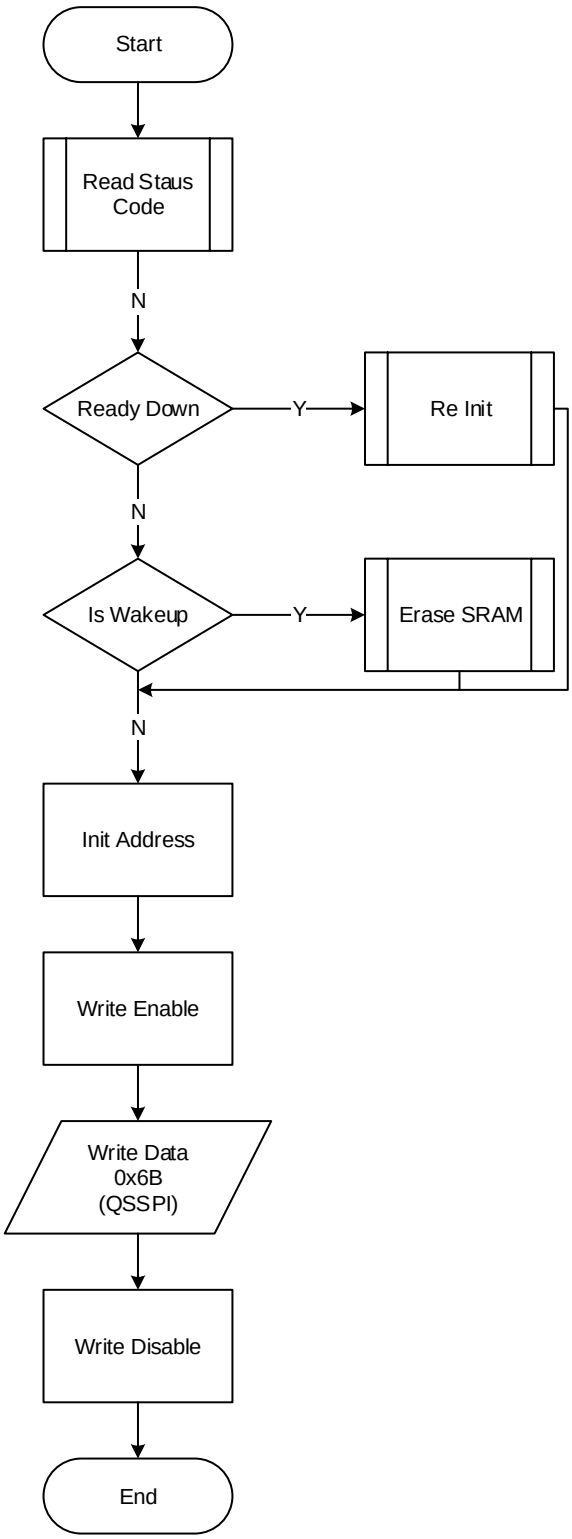

The connection diagram for configuring Gowin FPGA products via QSSPI is shown in Figure 3-30.

**Figure 3-30 QSSPI Configuration Mode Connection Diagram**

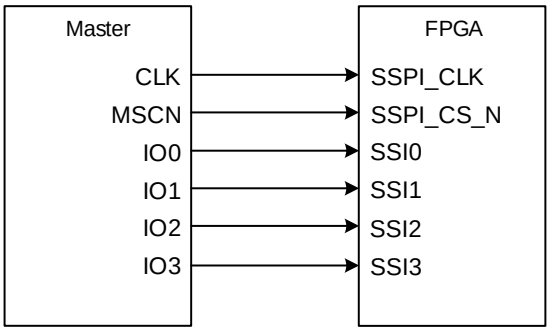


The timing diagram of QSSPI Write Data (0x6B) is as shown in the figure below.

**Figure 3-31 QSSPI Write Data (0x6B) Timing**

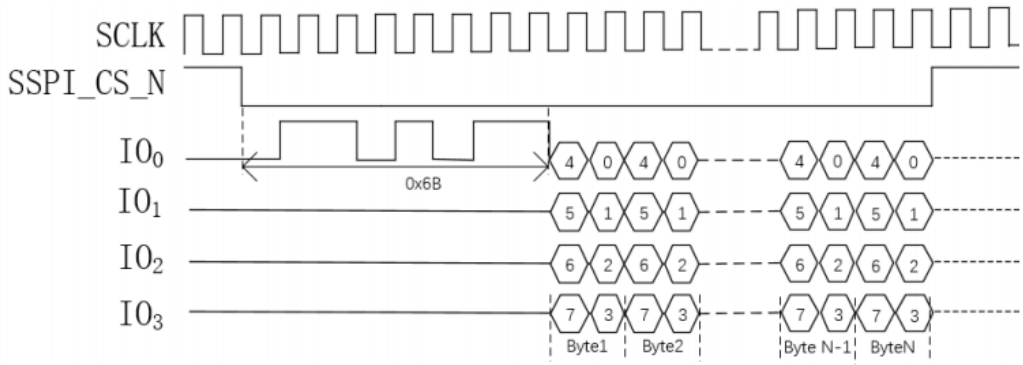


# 3.6 MSPI Configuration Mode

In MSPI (Master SPI) mode, FPGA is a Master and reads bitstream data from the external Flash via SPI port to complete configuration.

MSPI Configuration Process: Set the MODE pin to MSPI status, power on again or trigger RECONFIG_N at one low-level pulse, and the device will read bitstream data from the external Flash and complete configuration automatically.

According to the MSPI configuration features, remote upgrade requirements can be implemented. After starting the FPGA, if an upgrade is required, users can remotely write the configuration data into the external Flash, and trigger RECONFIG_N or power up again to upgrade the system if the upgrade conditions are met.

## 3.6.1 Connection Diagram for MSPI Configuration Mode

The connection diagram for configuring Gowin FPGA products

through MSPI is shown in Figure 3-32~Figure 3-34.

**Figure 3-32 Connection Diagram for MSPIx1 Configuration Mode**

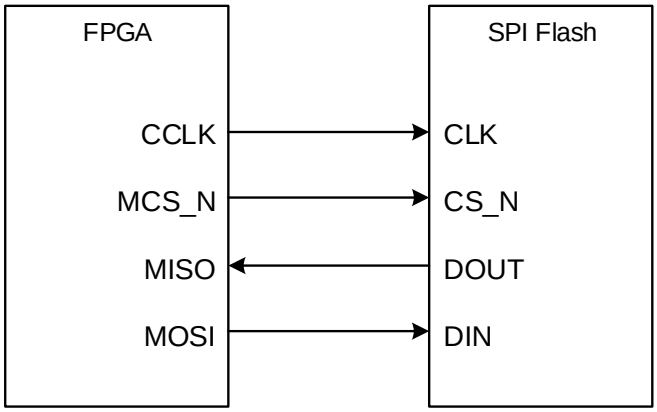


**Note!**

- [1] MSPI x1 frequency range: 2.5Mhz~105Mhz
- [2] The default configuration is MSPI x1, 3Byte addressing mode, which can be configured in the EDA software to improve the loading time.

**Figure 3-33 Connection Diagram for MSPIx2 Configuration Mode**

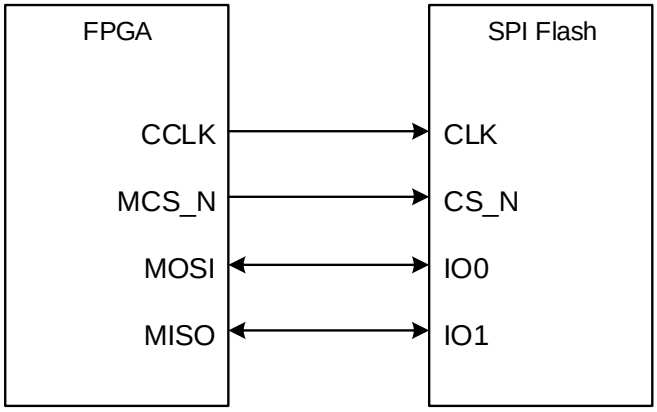


**Note!**

- [1] MSPI x2 frequency range: 2.5Mhz~105Mhz
- [2] The default configuration is MSPI x1, 3Byte addressing mode, which can be configured in the EDA software to improve the loading time.

**Figure 3-34 Connection Diagram for MSPIx4 Configuration Mode**

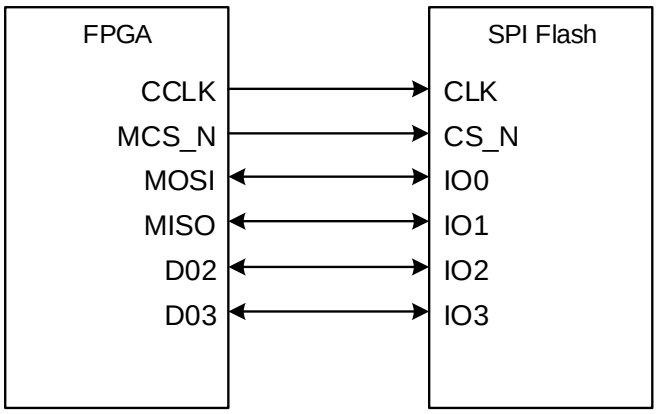


**Note!**

- [1] MSPI x2 frequency range: 2.5Mhz~105Mhz

- [2] The default configuration is MSPI x1, 3Byte addressing mode, which can be changed in the EDA software to improve the loading time.

## 3.6.2 MSPI Configuration Timing

See Figure 3-35 for MSPI timing.

**Figure 3-35 MSPI Configuration Timing**

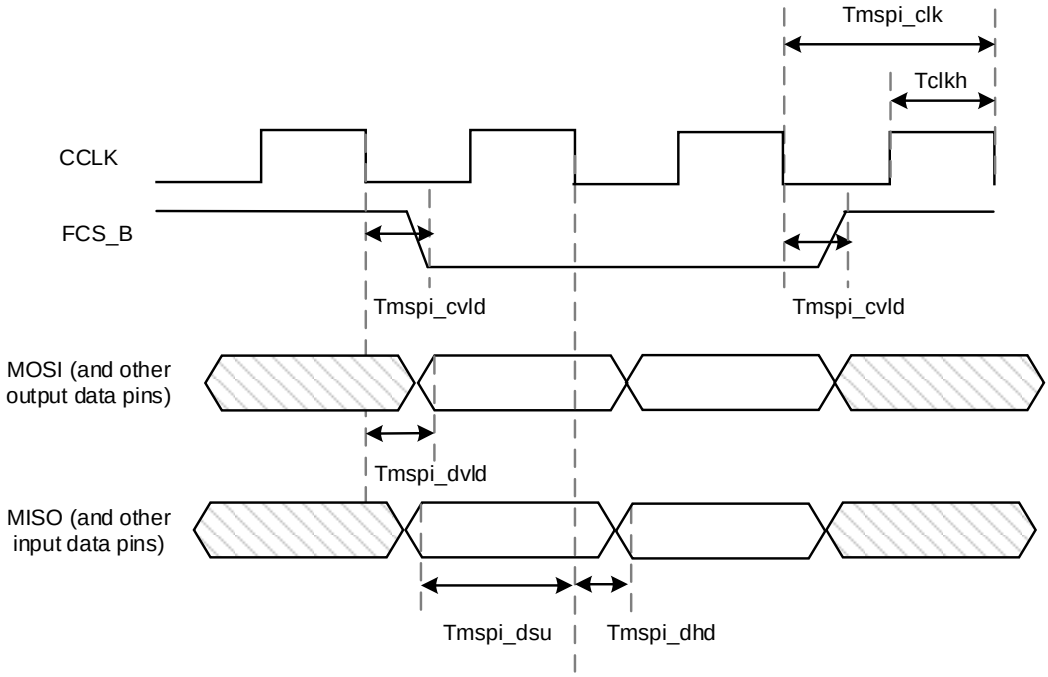


Table 3-13 shows the timing parameters.

**Table 3-13 MSPI Configuration Timing Parameters**

| Name | Description | Min. | Max. | Unit |
|---|---|---|---|---|
| Tmspi_clk | MSPI clock period | 10.0 | – | ns |
| Tmspi_cvld | delay of MSPI clock falling edge to CSI_B | – | 1.0 | ns |
| Tmspi_dvld | delay of MSPI clock falling edge to output data | – | 1.0 | ns |
| Tmspi_dsu | the setup time of input data | 2.0 | – | ns |
| Tmspi_dhd | the hold time of input data | 0 | – | ns |
| Tclkh | The time of clock high level | (clock cycle ) *45% | (clock cycle) *55% | – |

### 3.6.3 MSPI

Arora V FPGA products start from the 0x000000 address at the default frequency of 2.5MHz after power on, and read the bit stream data with SPI x1 protocol to complete the configuration. If the first configuration fails, the device automatically performs a second configuration operation from the default address 0x800000. The factors that can lead to a failed configuration include false ID validation error, CRC check error, instruction error, and timeout error. If both configurations fail, the device goes into Manu mode.

**Figure 3-36 The Flow Chart of MSPI Mode**

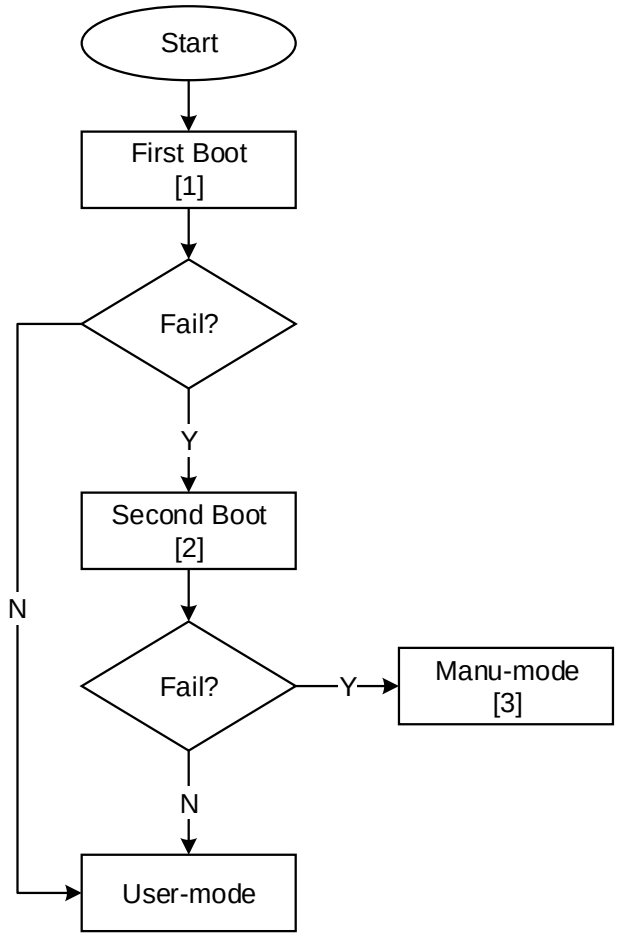


**Note!**

- [1] The default configuration of the first loading is MSPI x1, 3Byte addressing Read mode, which can be configured in the EDA software to improve the loading time.
- [2] The loading address can be set as required in the EDA tool.
- [3] In manu-mode, SSPI and JTAG interfaces can be used for debugging or manually configuration.

In addition, in MSPI mode, jumping to any loading address can be realized by adding the “mspi_jump(0x6E)” instruction at the beginning of the bitstream file. It is convenient to allocate FLASH storage space flexibly in complex system.

# 3.7 CPU Configuration Mode

The CPU configuration interface supports 8/16/32 bit width, which can adjust the bus width adaptively and supports 8-bit width data readback. Both master mode and slave mode are supported. The only difference between the master mode and the slave mode is the direction of the interface clock. The master mode selects the internal crystal as the configuration clock source by default, and EMCCLK can be selected as the configuration clock source through the EDA tool. The maximum clock speed of the interface is listed as follows:

- 32-bit width: The max. clock frequency is 50MHz
- 16-bit width: The max. clock frequency is 100MHz
- 8-bit width: The max. clock frequency is 100MHz

## 3.7.1 Connection Diagram for CPU Configuration Mode

The connection diagram for the CPU mode is shown in Figure 3-37.

**Figure 3-37 Connection Diagram for CPU Mode**

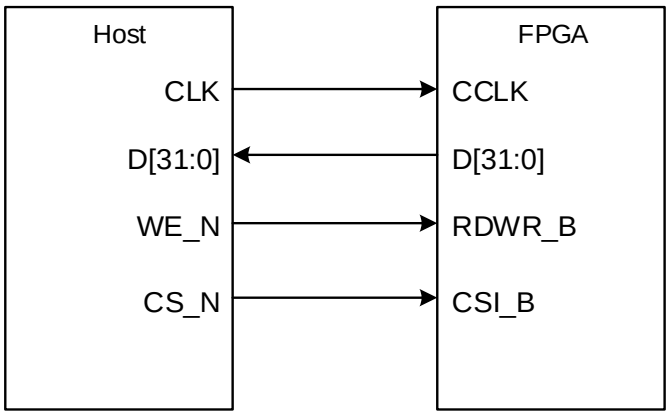


**Note!**

CCLK is output in master mode and input in slave mode.

Other than the power requirements, the following conditions need to be met to use the CPU configuration mode:

- Initiate new configuration
  Power-on again or trigger RECONFIG_N at one low pulse.

## 3.7.2 Configuration Timing

CPU Timing is as shown in Figure 3-38.

**Figure 3-38 CPU Mode Configuration Timing**

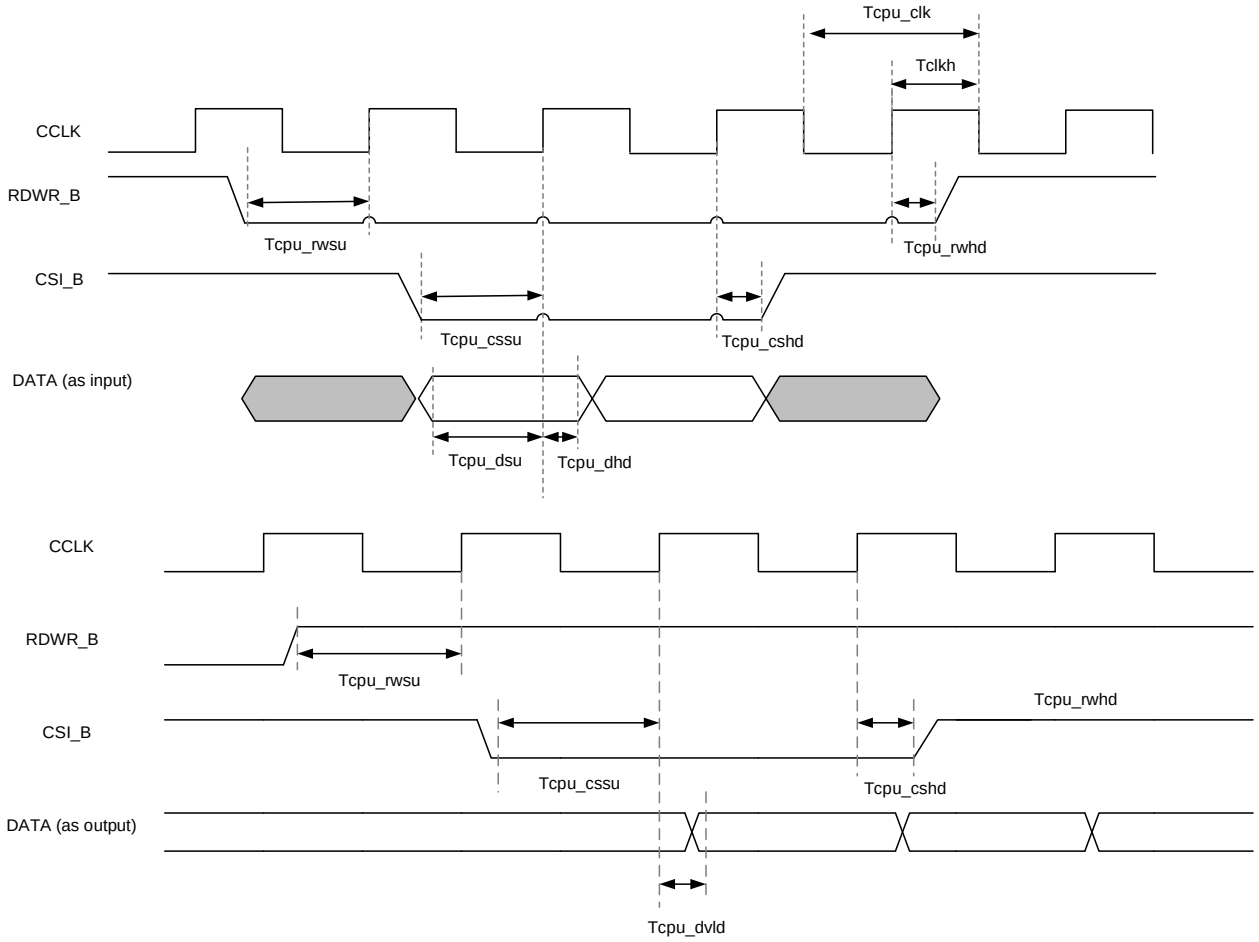


Table 3-14 shows the timing parameters.

**Table 3-14 CPU Configuration Timing Parameters**

| Name | Description | Min. | Max. | Unit |
|---|---|---|---|---|
| Tcpu_clk | CPU port clock period | 10.0 | – | ns |
| Tcpu_rwsu | RDWR_B setup time | 8.0 | – | ns |
| Tcpu_rwhd | RDWR_B hold time | 0 | – | ns |
| Tcpu_cssu | CS_B setup time | 8.0 | – | ns |
| Tcpu_cshd | CS_B hold time | 0 | – | ns |
| Tcpu_dsu | input data setup time | 4.0 | – | ns |
| Tcpu_dhd | input data hold time | 0.0 | – | ns |
| Tcpu_dvld | delay of CPU clock to output data | – | 8.0 | ns |
| Tclkh | The time of clock high level | (clock cycle ) *45% | (clock cycle) *55% | – |

## 3.7.3 Continuous Data Loading

Continuous data loading is used by the Host to provide continuous data stream for configuration. After power up, the controller sets the RDWR_B signal to write control (RDWR_B = 0) and sets the CSI_B signal to zero (CSI_B = 0). Note that RDWR_B must be driven to low before CSI_B, otherwise an abort occurs.

**Figure 3-39 Continuous Data Loading Timing**

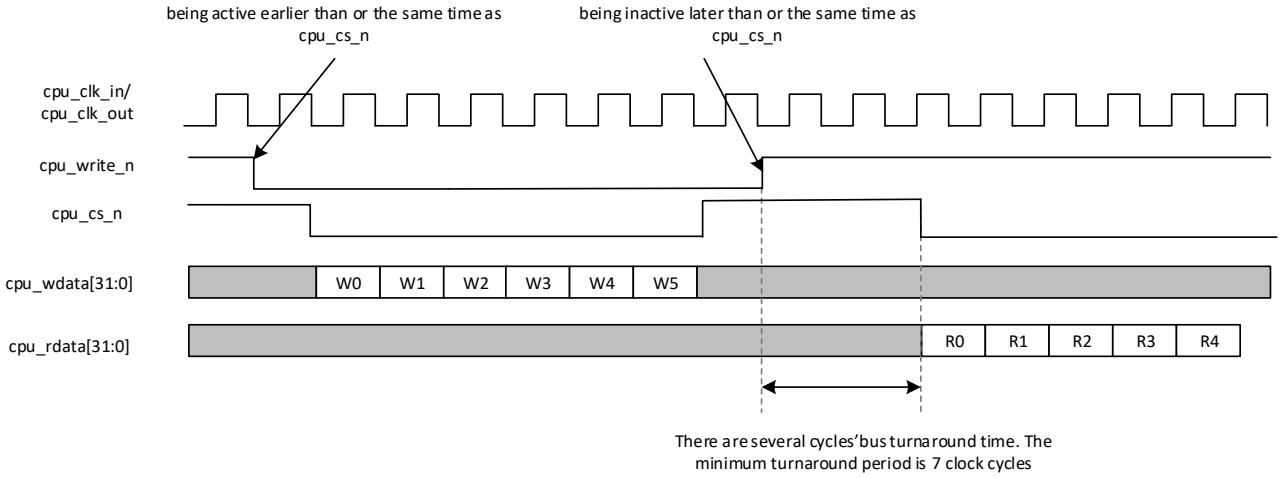


## 3.7.4 Non-continuous Data Loading

Non-continuous loading is used for that the Host cannot provide continuous data stream for configuration. The Host has two ways to stop the configuration: Pull high the CSI_B signal or pause CCLK.

**Figure 3-40 Non Continuous Data Loading Timing**

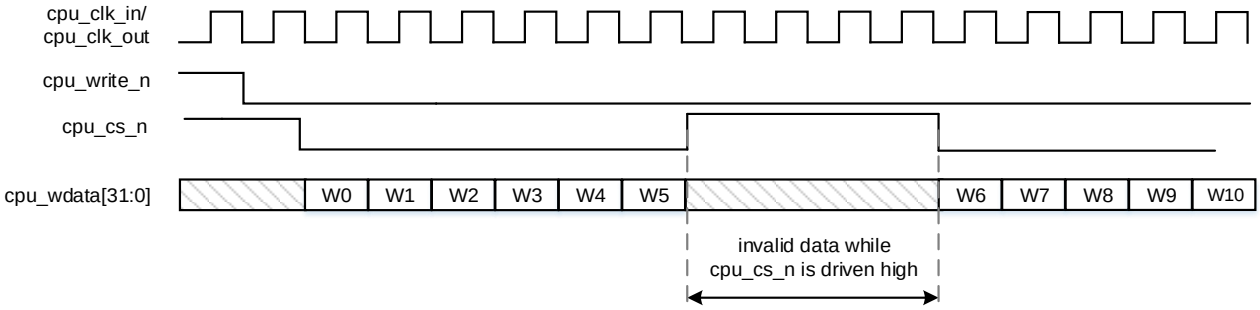

# 3.8 SERIAL Configuration Mode

In SERIAL mode, Host configures Gowin FPGA products via serial interface. SERIAL is one of the configuration modes that use the least number of pins. It supports both master mode and slave mode. The only difference between the two modes is the different direction of the interface clock. The SERIAL mode can only write bitstream data to FPGA and cannot readback data from FPGA devices; as such, the SERIAL mode cannot read information on the ID CODE and USER CODE and status register.

## 3.8.1 Connection Diagram for SERIAL Configuration Mode

The connection diagram for the SERIAL mode is shown in Figure 3-41.

**Figure 3-41 Connection Diagram for SERIAL Mode**

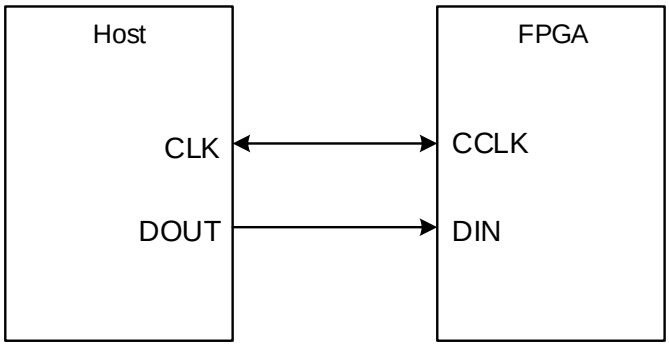


**Note!**

[1] CCLK is output in the master mode and input in the slave mode.

### SERIAL Configuration Timing

See Figure 3-42 for the timing of SERIAL mode.

**Figure 3-42 SERIAL Configuration Timing**

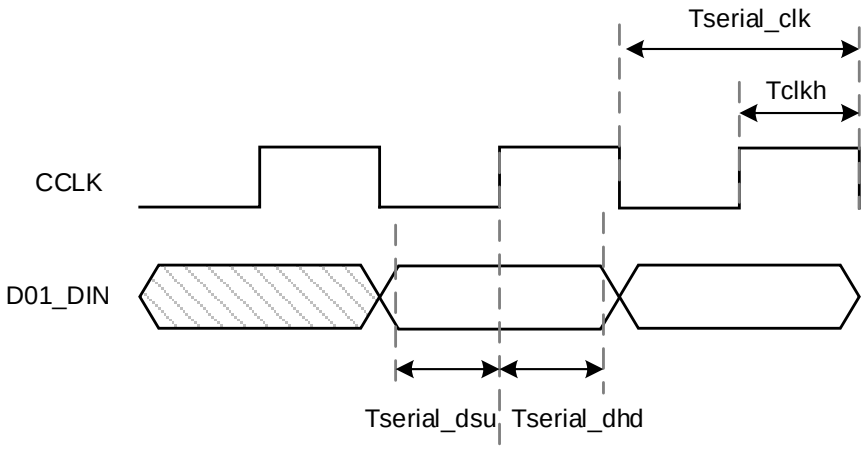


Table 3-15 shows the timing parameters.

**Table 3-15 SERIAL Configuration Timing Parameters**

| Name | Description | Min. | Max. | Unit |
|---|---|---|---|---|
| Tserial_clk | Serial port clock period | 10.0 | – | ns |
| Tserial_dsr | the setup time of input date | 4.0 | – | ns |
| Tserial_dhd | the hold time of input data | 0 | – | ns |
| Tclkh | The time of clock high level | (clock cycle ) *45% | (clock cycle) *55% | – |

Other than the power requirements, the following conditions need to be met to use the SERIAL configuration mode:

- Initiate new configuration
  Power-on again or trigger RECONFIG_N at one low pulse.

# 3.9 Daisy Chain

## 3.9.1 Serial Daisy Chain

In a serial daisy chain, a device receives its configuration data through a DIN pin and transmits the configuration data to the downstream device through a DOUT pin. The most upstream device (the device closest to the data source, i.e., Device_1 in the figure below) can be in one of the following modes:

- Master Serial
- Slave Serial
- Master SPI

The downstream device must be in the mode:

- Slave Serial

**Note!**

Master SPI must be in the x1 mode.

Below is a diagram of a serial daisy chain, where the Host first configures Device 1 and then bypasses the bitstream to its adjacent Device (Device 2 in the figure) via the DOUT pin.

**Figure 3 - 43 Diagram of Daisy-Chain**

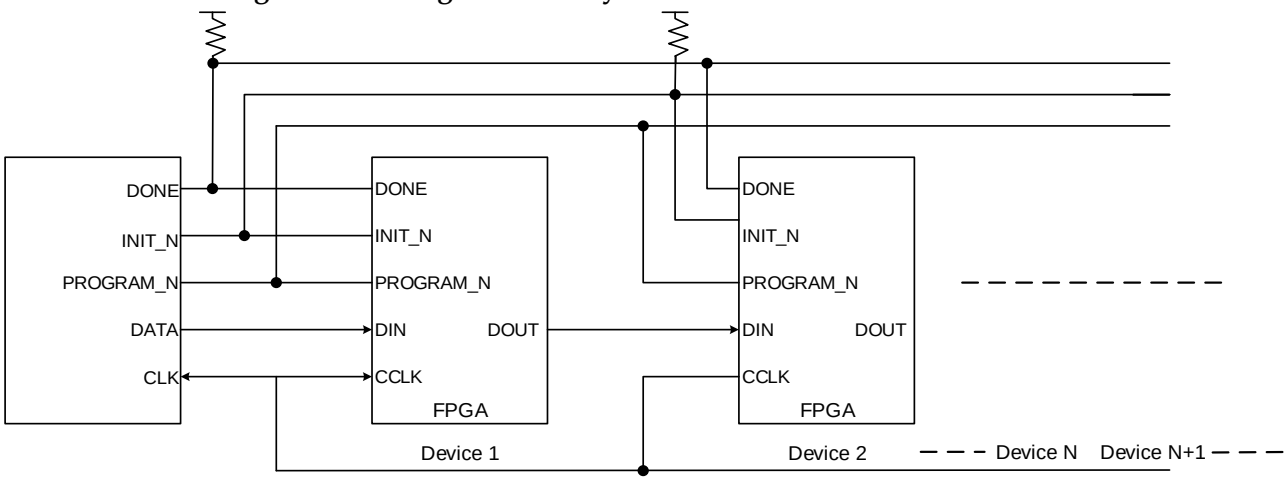

## 3.9.2 Parallel Daisy Chain

In the parallel Daisy chain, the "chip selection" signal is transmitted from the upstream device to the downstream device. The most upstream device can be in one of the following modes:

- Master CPU
- Slave CPU

The downstream device must be in the mode:

- Slave CPU

**Note!**

The write enable pin (RDWR N) must be pulled low for all devices.

Below is a diagram of a parallel daisy chain, where the Host first configures Device 1 and then bypasses “CSN” to Device 2 via the “CSO” pin. Once the device configuration is done, all downstream devices transmit the "CSN" to the next device adjacent to it.

**Figure 3 - 44 Diagram of Parallel Daisy-Chain**

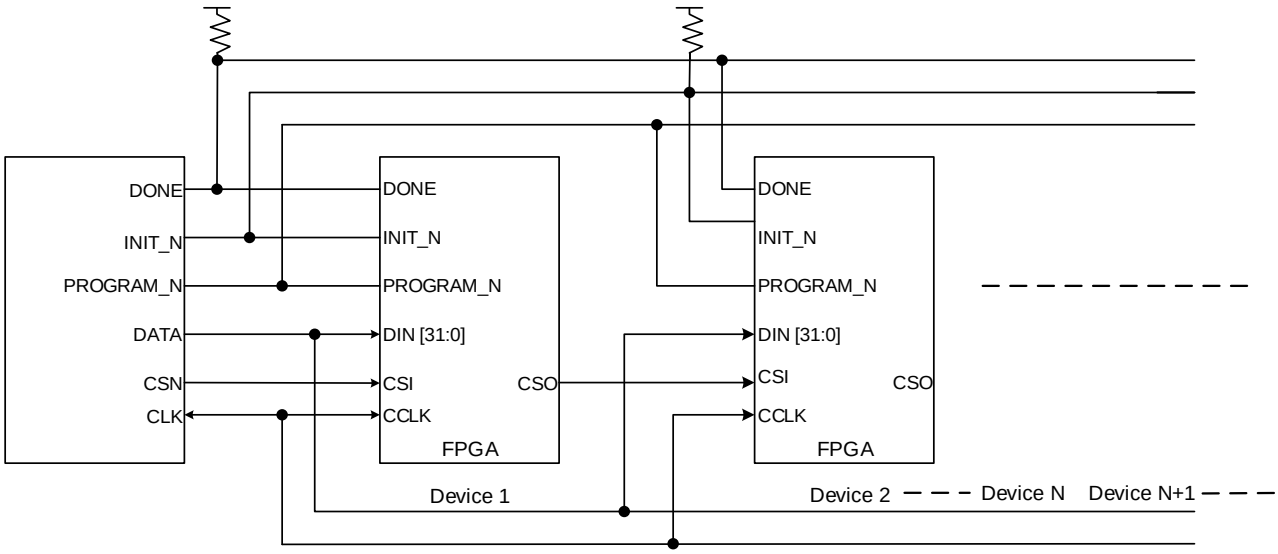

# 4 Configuration Details

GOWINSEMI Arora V FPGA products are high performance devices based on SRAM technology. The device based on SRAM technology loses the configuration data after power off and needs to be reconfigured after each power on.

Gowin FPGA products have abundant packages. The configuration modes supported by each device are related to the number of configuration pins bonded out: All devices support JTAG configuration. The mode value for each configuration mode is different.

## 4.1 Configuration Notes

### Power On Requirement

**Figure 4-1 Process of Power on**

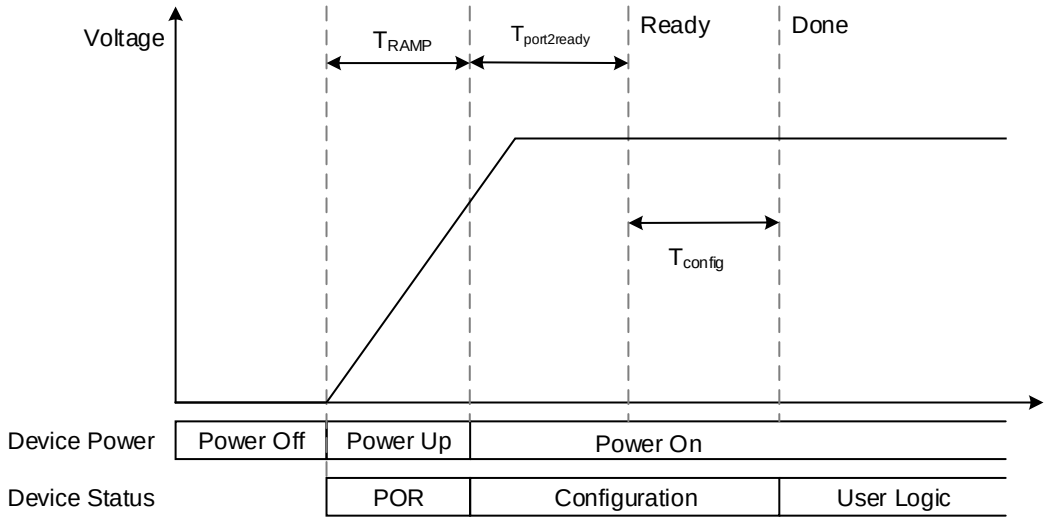


When the power up voltage of VCC, VCCO, and VCCX reaches the min. value, FPGA begins to start: stable voltage and RECONFIG_N is not pulled down > The internal circuit of FPGA pulls down READY and DONE pins > FPGA initialization > Pulling up READY and sampling MODE value > Reading and checking the configuration data according to the configuration mode > FPGA waking up > DONE pulling up > Entering user

mode.

Power supply voltage needs to be stable in the process of FPGA start-up. RECONFIG_N needs to keep high after being powered up until the voltage is stable for 1ms and also in the process of FPGA initialization. RECONFIG_N can be vacant or external pulled up. All GPIOs output high resistance state before FPGA is waken up.

### Configuration Pin Reuse

In different configuration modes, users need to ensure that FPGA works in the selected configuration mode according to the pin functions. If user pins are insufficient, these pins can be configured and used as GPIOs, but pins associated with data transmission need to be kept. MODE [2:0] is used to select programming configuration MODE. MODE can be fixed through the pull-up or pull-down resister. It is recommended to use 4.7K pull-up resister and 1K pull-down resistor.

**Note!**

The RECONFIG_N, READY, and DONE pins are associated with each configuration mode. Whether they are set as GPIO or not, users should ensure that their initial value or pin connection state meets programming and configuration conditions before completing the configuration process.

### Recommended Pin Connection

For the recommended pin connection, please refer to the related schematic manuals.

### Timing for Power-on Again and Triggering RECONFIG_N at Low Pulse

Figure 4-2 and Figure 4-3 Trigger Timing show the timing for power-on again or triggering RECONFIG_N at low pulse.

**Figure 4-2 Power Recycle Timing**

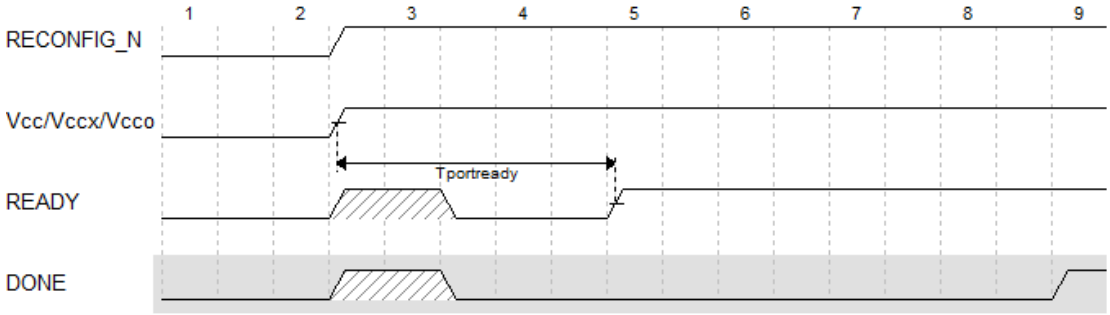

**Figure 4-3 Trigger Timing**

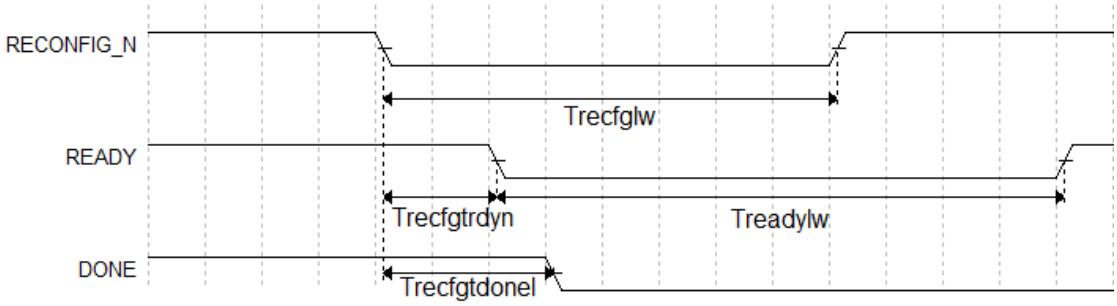


Table 4-1 shows the timing parameters of Arora V FPGA products.

**Table 4-1 Timing Parameters of Power on Again and RECONFIG_N triggering for Arora V FPGA Products**

| Name | Description | Min. | Typ. | Max. |
|---|---|---|---|---|
| $T_{portready}$ | Time from POR to the rising edge of READY | - | 5ms | 23ms |
| $T_{recfglw}$ | RECONFIG_N low pulse width | 25ns | - | - |
| $T_{recfgtrdyn}$ | Time from RECONFIG_N falling edge to READY low | - | - | 70ns |
| $T_{readylw}$ | READY low pulse width | TBD | - | - |
| $T_{recfgtdonel}$ | Time from RECONFIG_N falling edge to READY low | - | - | 80ns |

# 4.2 Configuration Sequence

GOWINSEMI FPGA products will go through initialization, SRAM configuration after power-up. Figure 4-4 shows the configuration process.

**Figure 4-4 GOWINSEMI FPGA Configuration Process**

**Note!**

The RECONFIG_N pin needs to be held high from power-up to full loading of the device.

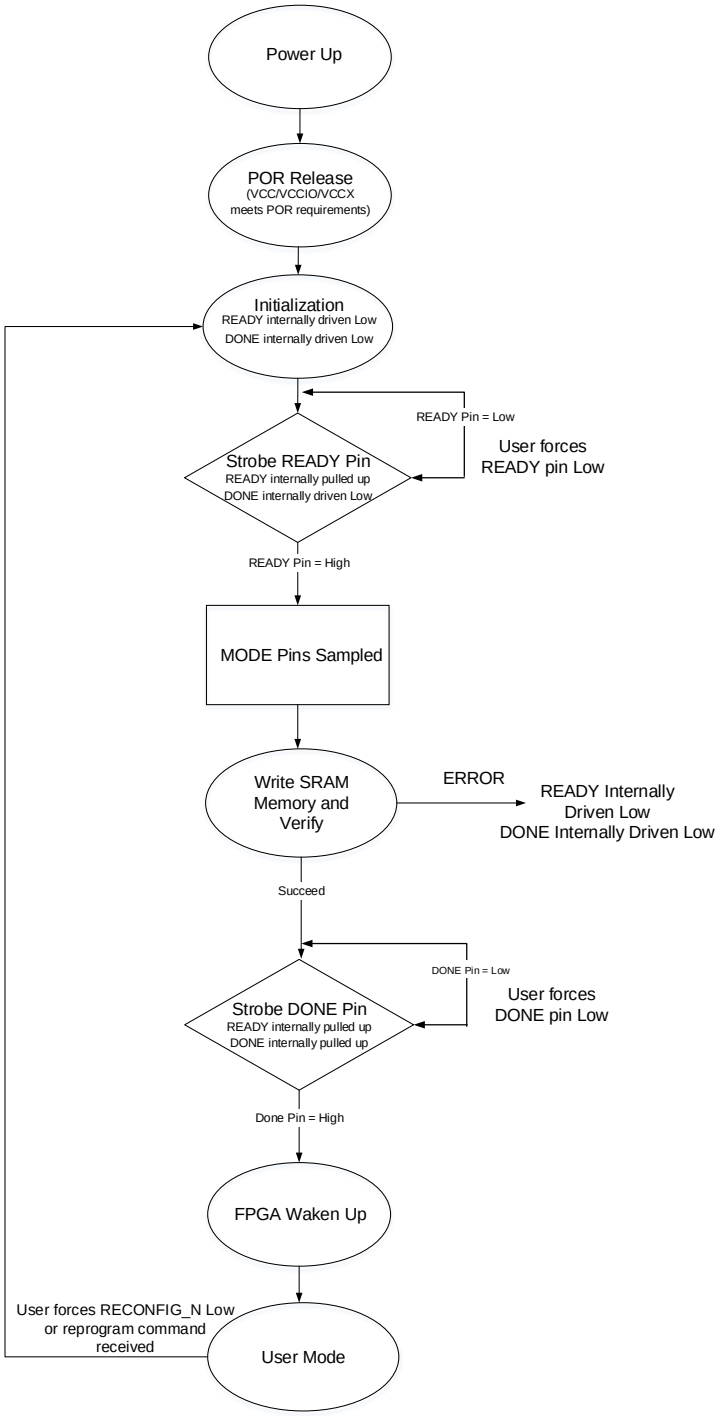


**Note!**

- READY, DONE, and RECONFIG_N are bidirectional IOs with open drain output

and internal weak pull-up (the pull-up current is about 100uA).

- You can control the timing of the device starting to load by forcing the READY pin low.
- You can control the timing of the device waking up by forcing the DONE pin low.

### 4.2.1 Power-Up Timing

During power-up, the Power On Reset (POR) circuit starts to work. The POR circuit ensures that the external I/O pins are in a high-resistance state and monitors the VCC/VCCX/VCCOn power rail. When the VCC/VCCX/VCCOn meets the minimum reset level (The reset level may vary for different devices, and different devices monitor different power rails.), the POR circuit releases the internal reset signal, allowing the FPGA to begin its initialization process. When the READY and DONE signals are pulled down, the device moves to the initialized state as shown in Figure 4-5.

**Figure 4-5 POR Timing**

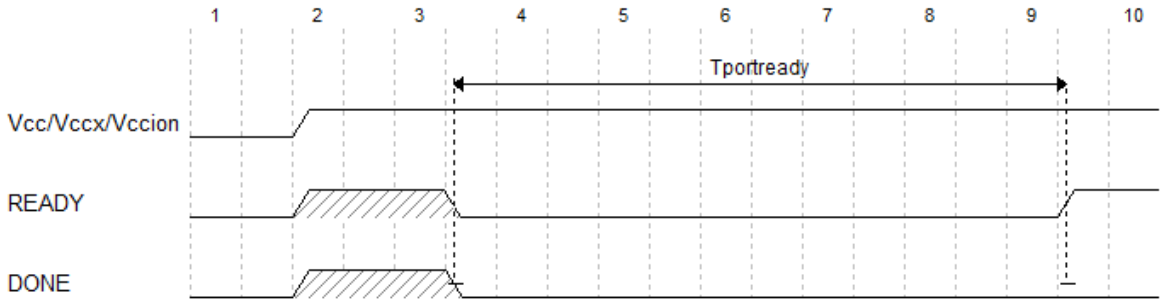


Table 4-2 lists the power rails monitored by POR circuits of different devices.

**Table 4-2 Power Rails**

| Series | Device | POR Rails |
|---|---|---|
| Arora V | GW5A-60 | VCC/VCCX/ VCCIO3/4/12/5 |
| | GW5AT-60 | VCC/VCCX/ VCCIO3/4/12/5 |

### 4.2.2 Initialization

After the power on reset circuit drives the READY and DONE status pins low, the GOWINSEMI FPGA immediately enters the SRAM initialization state. The initialization is to clear the configuration SRAM inside the FPGA.

The FPGA remains in the initialization state until all of the following conditions are met:

- The TINITL time period has elapsed.
- The RECONFIG_N pin is high.
- The READY pin is not driven low by an external drive.

The READY pin has two functions during the initialization phase:

- Indicates that the FPGA is currently clearing the internal configuration

SRAM.

- Acts as an input preventing the FPGA from exiting the initialization state when it’s driven low by an external driver.

### 4.2.3 Configuration

The FPGA enters the configuration state at the rising edge of the READY pin. The internal configuration SRAM of FPGA can be configured via multiple modes according to the MODE pin values. During the time the FPGA receives its configuration data, the READY pin can indicate its internal state. When READY is high, configuration proceeds without issues. If READY is low, an error has occurred and the FPGA does not operate.

### 4.2.4 Wake-up

When the configuration is done, the FPGA enters a wake-up state and the DONE pin is pulled up. In the wake up state, the FPGA performs the following operations in sequence:

1. Enables the global output signal (GOE), and then the FPGA I/O exits the high resistance state and and takes on its programmed functions. Sets the global set/reset signal (GSR) to prevent the input signal from affecting the Flip-Flop state inside the FPGA.
2. Releases the GSR and the global Write stop signal (GWDISn). Enables the GWDISn to prevent the FPGA from mistakenly rewriting the initialization data of SRAM.
3. Enables the external DONE pin. The DONE pin is a bidirectional, open-drain I/O when enabled. Keep the FPGA wake-up by externally driving the DONE pin low. When the DONE pin is driven high, the FPGA wake-up pahse is complete and enters user mode.

### 4.2.5 User Modes

After entering the user mode, the FPGA will perform the logical operations you designed immediately. The FPGA will remain in this user mode until the following three events are triggered:

- The RECONFIG_N pin is pulled down externally.
- A REFRESH command is received through the configuration port.
- Power cycle.

Once one of the above three events occurs, the FPGA will re-enter the configuration process.

## 4.3 Safety Precautions

Security is a key factor for users to design FPGA. Combined with GOWINSEMI devices features, Gowin programmer offers a series of safety precautions, which provides a perfect security mechanism for users' bitstream data.

Safety precautions consist of three stages:

- Before configuration, Gowin programmer checks the validity of the bitstream;
- During configuration, GOWINSEMI device verifies the accuracy of the transmission data in real time;
- After configuration, GOWINSEMI device enters the working state, masking any readback requests.

The details of the three stages are as follows:

### Before Configuration

Gowin programmer can be used to configure GowinFPGA by following the steps outlined below.

1. Connect the device that needs to be configured;
2. Start Gowin programmer to start scanning, and the connected FPGA devices can be identified automatically;
3. Select the bitstream and the configuration mode to configure the device.

During the process outlined above, Gowin programmer will read the connected device ID first, and then compare this with the bitstream ID that users selected. The configuration can only proceed when the two IDs are consistent, or the bitstream selected by users will be regarded as illegal data, resulting in configuration failure.

**Note!**

GOWINSEMI products have specific IDs that distinguish them from the other series of products. The bitstream generated by GOWINSEMI Software contains an ID verification directive, users only need to select the specific device when creating a new project.

### During Configuration

The device reads and verifies the bit stream ID first, and configuration starts if verification passes. To prevent bitstream modifications or possible transmission errors, GOWINSEMI devices adopt CRC to ensure bitstream is written in correctly. The specific process is outlined below.

Following each address segment of the bitstream generated by Gowin software, a CRC code is added. GOWINSEMI devices generate a CRC code in the process of receiving data and compares them with the check codes received. If a CRC error is detected, any data transmitted following this error will be ignored. The "DONE" indicator will not light up after configuration, and the CRC error message will be displayed on the Gowin programmer interface.

### After Configuration

After configuration, the device bitstream will be loaded to the SRAM according to the user mode selected. If the data is loaded to the SRAM, GOWINSEMI software sets the security bit automatically in the process of

bitstream generation, and no user can read the SRAM data.

**Note!**

GOWINSEMI takes no responsibility for the security of the external Flash.

# 4.4 Bitstream File Configuration

The features of Gowin FPGA products need to be configured and programmed using Gowin software. The settings mainly include the options of configuration pin multiplexing and bitstream data configuration. This chapter describes the bitstream file configuration. For the details about the configuration pin multiplexing, please refer to Configuration Pin Multiplexing.

To transfer the configuration data safely and accurately, the CRC calibration algorithm has been incorporated by default in the FPGA bitstream file, and the security bit is set. During the process of data configuration, the input data is checked in real time. The wrong data cannot wake up the device, and the DONE signal is pulled down. After the configuration of the bitstream with security bit is complete, data readback cannot be performed.

## 4.4.1 Configuration Options

Please refer to Figure 4-6 for the related configuration data setting interface. The options include CRC enable, bit stream data compression, encryption key settings, security bit settings, MSPI configuration frequency selection, SPI Flash starting address settings in multiple configuration modes, USER CODE setting, etc.

**Figure 4-6 Configuration Options**

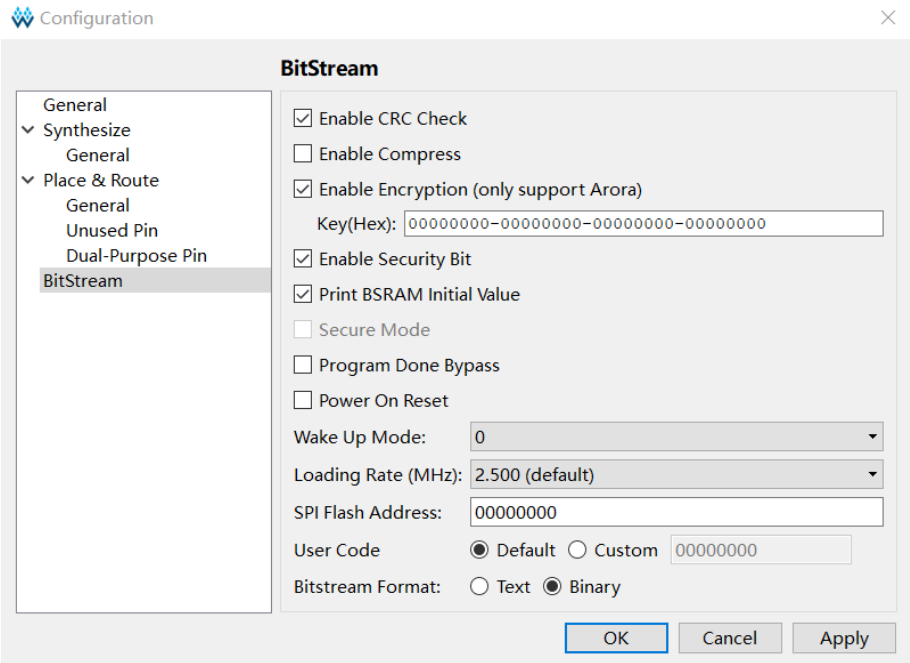


**Note!**

The security bit setting is forcibly checked after Gowin software verifies the encryption key setting option. In addition to ensuring the data is secure during the transmission

process, using these bitstream settings during configuration also prevents any readback, thereby ensuring maximum protection of user data.

### 4.4.2 Configure Data Encryption

GOWIN Arora V FPGA products support bitstream data encryption, using the 128 AES encryption algorithm. Please refer to the following steps for the data encryption configuration:

1. Enter the encryption KEY (KEY) in Gowin Software interface to generate the bitstream data;
2. Enter the decrypt key in Gowin Programmer;
3. After the encrypted bitstream data is loaded into the device, FPGA compares the data that has been loaded with the decrypt key values stored in advance.
   If data parsing succeeds, the device finishes configuration and begins to work; if data parsing fails, the device cannot work, and READY and DONE are pulled down.

#### Definition

- AES encryption key: AES private key used in AES encryption algorithm, specified by users and referred to as "key” in this manual.
- AES encryption key length: 128 bits;
- Key: An abbreviation for AES encryption key. Arora V FPGA products offers a 128-bit length space to store Key;
- Lock: To ensure the security of AES Key, it is used to control the read permissions for the Key. This operation is named as "lock" in this manual. When it's locked, all the read back data is 1.

#### Enter Encryption KEY

Refer to the steps below to write the encryption keys in Gowin Software:

1. Open the corresponding project in Gowin Software;
2. Select "Project > Configuration > Dual Purpose Pin” from the available menu options;
3. Click "BitStream", check "Enable Encryption (only support Arora)" and input the key value, as shown in Figure 4-7.

**Figure 4-7 Encryption Key Setting Method**

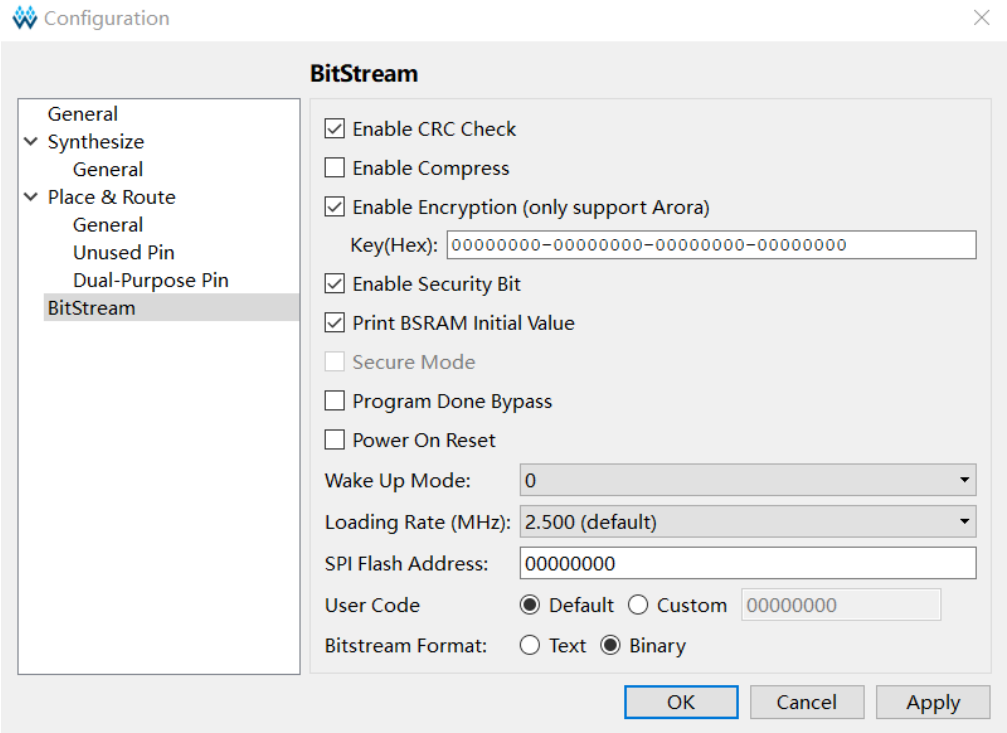


After setting the encryption key successfully, write the decrypted key to the FPGA key storage area for the device to analyze the encrypted bitstream data to complete the configuration.

### Enter the Decrypt Key

To input the decryption key, refer to the following steps:

1. Open Gowin Programmer;
2. Scan the FPGA device;
3. Right-click on the device name and select " Security Key Setting";
4. Enter the encrypted key value in the pop-up interface, click "Write" to write the value to the FPGA, as shown in Figure 4-8.

**Figure 4-8 Setting the Decryption Key**

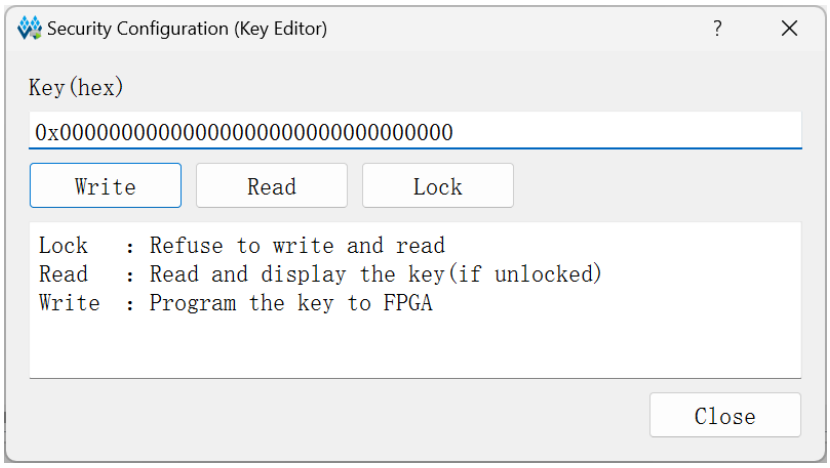


After the decryption key is written successfully, readback the written value via the "Read" button on the interface to verify.

After the key is written successfully, users also can "lock" it in FPGA via the Lock command. Once you have performed this action, any read and write key operations will be invalid, the key value cannot be modified, and all read bits are all "1".

After the decryption key is set, the encrypted bitstream data will only work when the data matches the decryption key. The key does not affect the non-encrypted bitstream data.

**Note!**

The initial value of the Gowin FPGA keys is 0. If a key value is changed to 1, it cannot be changed back to 0. For example, the key value written during an operation is 00000000-00000000-00000000-00000001, and the last bit of the modified key must be 1.

### Programming Operation

Gowin Programmer offers the tool for programming AES encryption key. Open this tool by clicking "Edit > Security Key Setting" in Gowin Programmer, as shown in Figure 4-9.

**Figure 4-9 AES Security Configure**

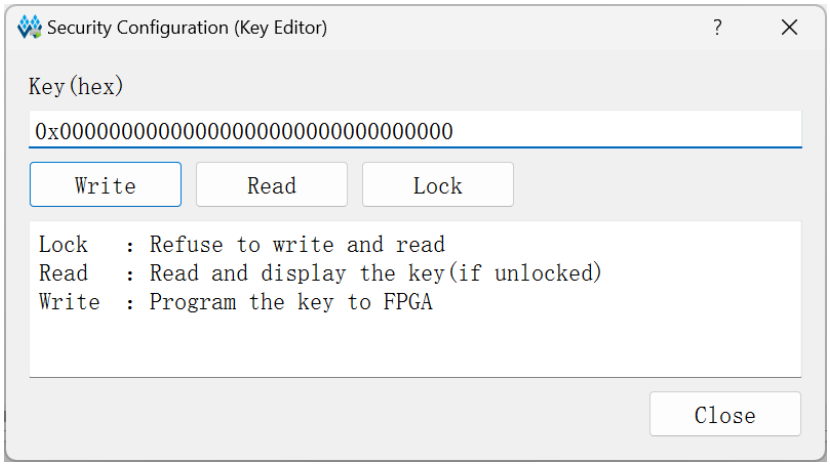


This configuration contains the following three parts:

- Write: Write Key;
- Read: Read Key;
- Lock: Lock read and write access to the Key.

***Write***

1. Write the user-defined Key (AES Key) to the text box in the figure above;
2. Click "write" button;
3. Return the validation result after running.

***Read***

Click "Read" button to validate the written AES encryption key again. The Key that is read from the tool will be displayed in the text box in the figure above;

***Lock***

Click "lock" to lock the read and write permission of Key. If it is locked, the Key cannot be read or write.

### Programming Flow

Figure 4-10 ~ Figure 4-14 show the flow of how to program or lock the AES key. All the flows are based on JTAG protocol.

***ID CODE***

Check the device ID to determine whether the JTAG protocol works properly and whether the programming object is correct to avoid

misoperation.

**Figure 4-10 Prepare**

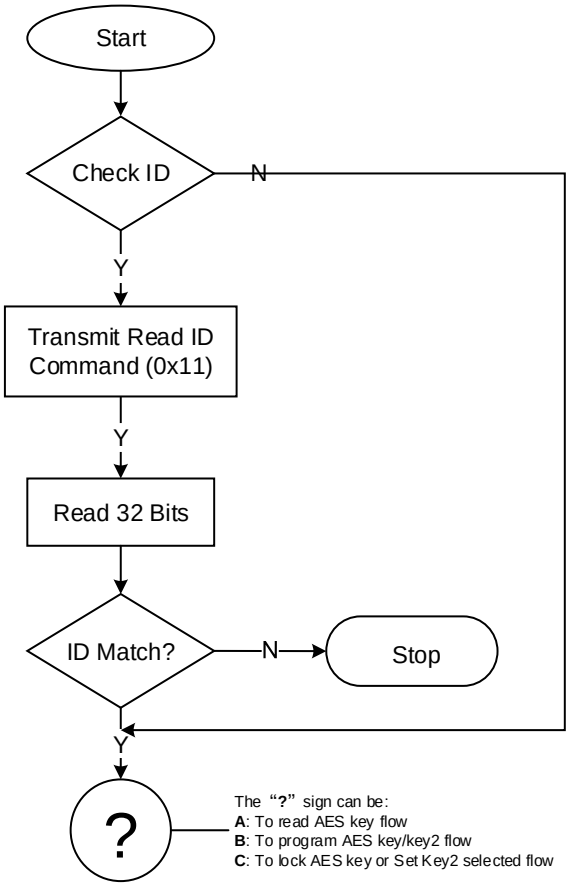

***Read AES Key***

**Figure 4-11 Read AES Key Flow**

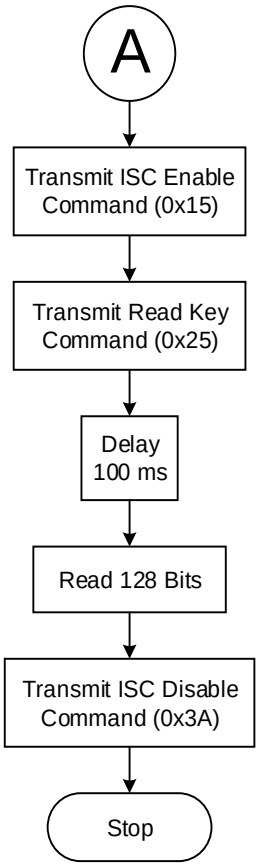

***Program AES Key***

**Figure 4-12 Program AES Key Flow**

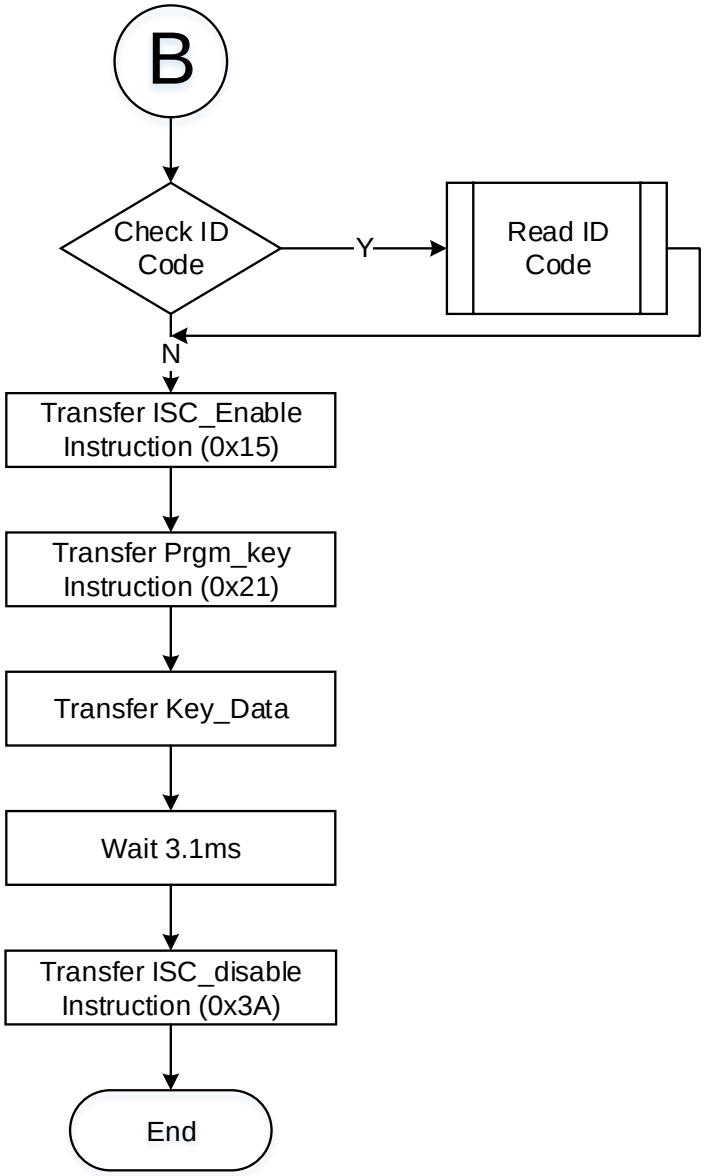

**Figure 4-13 Program AES Key2 Flow**

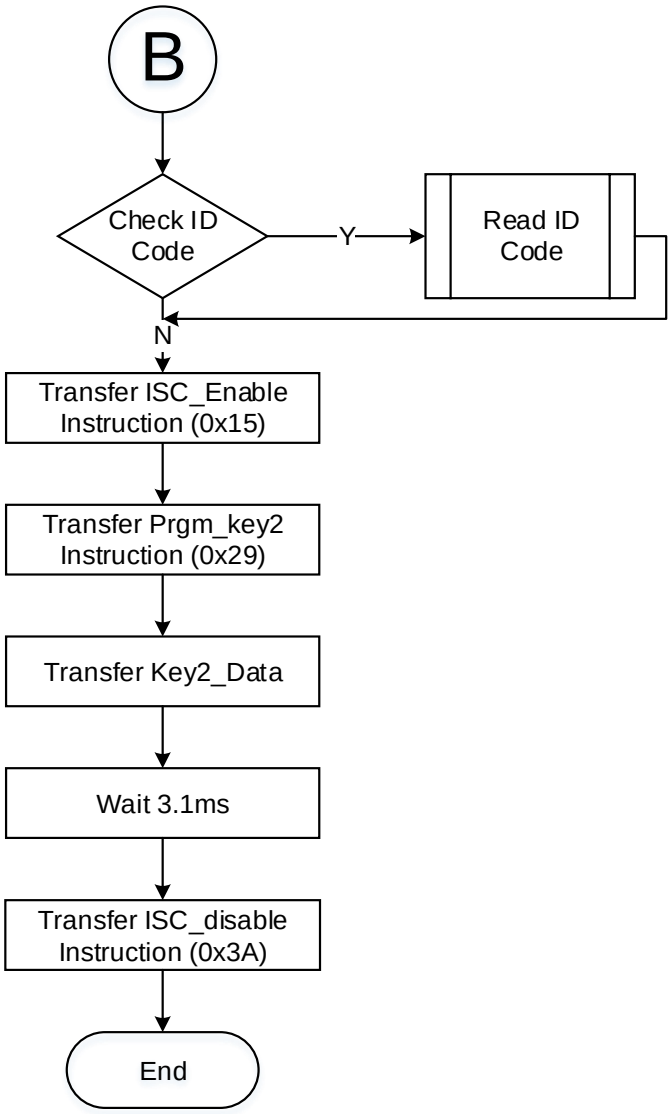

***Lock AES Key***

Locking the AES Key prevents the Key leakage. After locking the AES Key, you will not be able to read or configure the AES Key.

**Figure 4-14 Lock AES Key Flow**

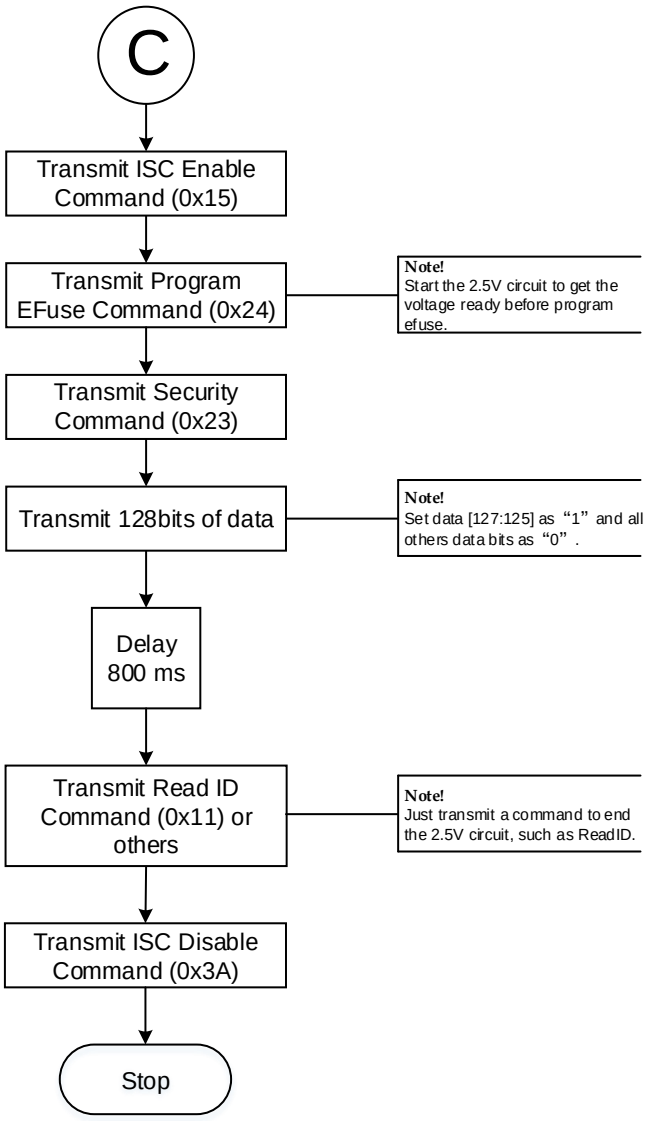


## 4.4.3 Configuration File Size

The Gowin bitstream format can be ASCII with annotations or Binary with no annotations. The file with a. fs suffix is a text format file. Lines beginning with "//" are annotations. The others are the bitstream data. The file with a .bin suffix is a binary format file, with no annotations. This binary format file is commonly used for embedded programming. Users can configure the bitstream file format in Gowin Software.

1. Open the Gowin Software;
2. On the Process tab, right click Place & Route and then click "Configuration > Bitstream";
3. In the options of Bitstream Format, select Text or Binary, as shown in Figure 4-15.

**Figure 4-15 Bitstream Format generation**

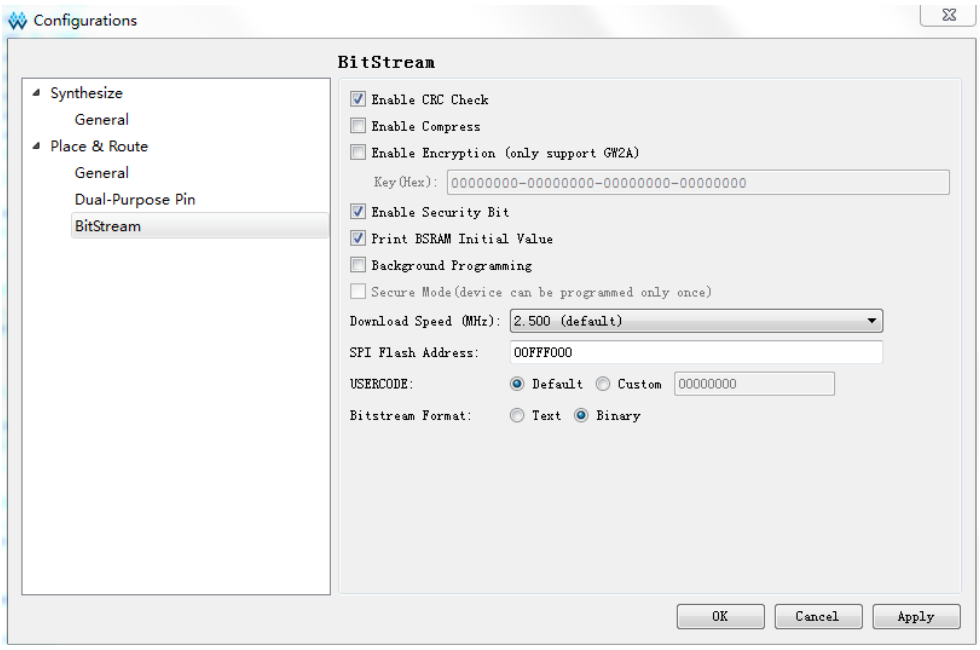


Gowin supports compressing bitstream data. The compression ratio is related to the user design. This manual only provides uncompressed configuration file sizes, as shown in Table 4-3.

**Table 4-3 Arora V FPGA Products Configuration File Size (Max.)**

| LUT | Max. Configuration File Size |
|---|---|
| 59904 | 21Mb |

**Note!**

The data in the table is the file size in binary format, and the configuration file is not compressed.

### 4.4.4 Configuration File Loading Time

Gowin FPGA can be used as Master to read bitstream files from Flash and configure SRAM. When the FPGA is powered on and ready, it starts to read bitstream files, and when the loading is done, the FPGA enters the User Logic state, as shown in Figure 4-16.

**Figure 4-16 Process of Power on**

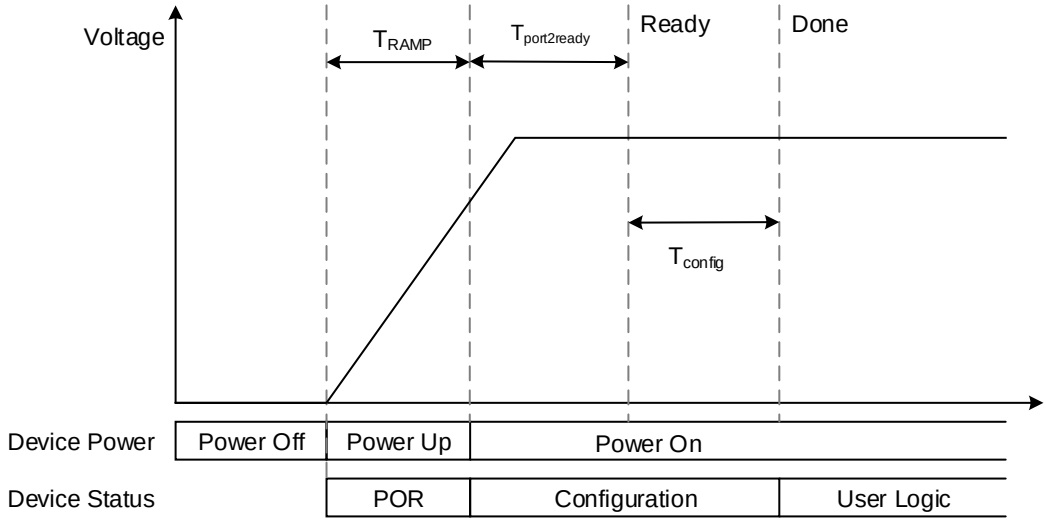


Arora V FPGA products support MSPI mode, that is, it can read data from the SPI Flash and configure FPGA automatically. The default frequency of reading configuration file is 100Mhz. Bit data is loaded per SPI clock, and the required loading time can be calculated according to the file size. The clock frequency for MSPI to read SPI Flash can be up to 125Mhz.

The loading time is different according to the configuration file size, the loading frequency, and the loading bits per clock.

The loading time in MSPI mode is as shown in Table 4-4.

**Table 4-4 Loading Time in MSPI Mode**

| LUT | Max. Configuration File Size | Max. value (ms, SPI x 1 Loading frequency = 2.5MHz) | Max. value (ms, SPI x 1 Loading frequency= 25MHz) | Max. value (ms, SPI x 1 Loading frequency = 104MHz) | Max. value (ms, SPI x 4 Loading frequency = 104MHz) |
|---|---|---|---|---|---|
| 59904 | 21Mb | 8400 | 840 | 201.9 | 50.5 |

What is listed above is the reference of loading time. From power on to configuration completion of the device, in addition to the configuration time, there are also the power on time (Tramp) and initialization time of the device. The specific power on time is related to the power supply device. Therefore, the approximate time of FPGA from power on to loading completion can be calculated according to the following formula:

**MSPI Mode**

$T_{loading\ time} = T_{ramp} + T_{portready}$ + Number of Data Stream Bits / Loading frequency

# 4.5 SPI Flash Selection

The external SPI Flash device operation instructions supported by Gowin FPGA products are shown in Table 4-5. The Mxic and Winbond products are all in accordance with the requirements. In principle, as long as the read instruction is ordinary or fast, Gowin FPGA can all read data from this Flash.

**Table 4-5 SPI Flash Operation Instruction**

| Operation | Instruction |
|---|---|
| Read | 8’h03 |
| Fast read | 8’h0B |
| Dual output fast read | 8’h3B |
| Quad output fast read | 8’h6B |
| 4-byte read | 8’h13 |
| 4-byte fast read | 8’h0C |
| 4-byte dual output fast read | 8’h3C |
| 4-byte quad output fast read | 8’h6C |

**Note!**

At least one of the Flash read instruction supported by GOWIN FPGAs must be 03 or 0B, and the capacity must be not less than 64Mb.

# 5 Status Register and Efuse Definition

## 5.1 Status Register

A Status Register is provided inside the device for debugging. By reading the Status Register, the state of the device can be preliminarily determined, such as whether the wakeup is successful, whether there is a loading error, etc.

**Table 5-1 GW5AT-60 Status Register**

| Bit | Domain | Description |
|---|---|---|
| 31 | auto_erase | 1= bulk erase is ongoing |
| 30 | wakeup | 1= wakeup status (all global signals, i.e. gsr, gwd, goe and done, are driven high) |
| 29 | init_r | 1= initialization is done<br>This signal is equal to the status of “INIT_N” pin |
| 28 | mfg_done | 1= OTP reading is done and MFG pattern is verified |
| 27 | decomp_fail | 1 – no corresponding dictionary item is found during decompressing a code-word |
| 26:25 | sync_det_retry | The retry time of sync pattern detection in MSPI mode<br>00 – no retry<br>01 – retry one time<br>10 – retry two times<br>11- no “sync pattern” is found after three times detection |
| 24:23 | cpu_bus_width | the detected bus width of CPU interface<br>00 – no BWD pattern is detected<br>01 – 8-bit mode<br>10 – 16-bit mode<br>11 – 32-bit mode |
| 22 | ser_running | 1: CMSER is ongoing<br>0: CMSER is in IDLE state |
| 21 | ser_ecc_uncorr | 1: Uncorrectable ECC error has been detected<br>0: no uncorrectable ECC error was detected |
| 20 | ser_ecc_corr | 1: Correctable ECC error has been detected |

| Bit | Domain | Description |
|---|---|---|
| | | (whether or not to be corrected is dependent on register setting)<br>0: no correctable ECC error was detected |
| 19 | ser_crc_err | 1: CRC error has been detected<br>0: no CRC error has been detected |
| 18 | ser_crc_done | 1: at least one time of CRC comparison has been done<br>0: no CRC comparison was done |
| 17 | sspi_mode | |
| 16 | key_right | |
| 15 | encrypted_format | |
| 14 | security_final | |
| 13 | done_final | |
| 12 | i2c_sram_f | |
| 11 | cmd_bypass_state | |
| 10 | nj_active_r | |
| 9 | auto_boot_1st_fail | |
| 8 | prgm_spi | |
| 7 | edit_mode | |
| 6 | preamble | |
| 5 | memory_erase | |
| 4 | auto_boot_2nd_fail | |
| 3 | time_out_r | Timeout Error (1 indicates that an Error occurred and 0 indicates that no Error occurred) |
| 2 | id_fail_r | ID Verify Failed Error (1 indicates that an Error occurred and 0 indicates that no Error occurred) |
| 1 | bad_cmd_r | Bad Command Error (1 indicates that an Error occurred and 0 indicates that no Error occurred) |
| 0 | crc_error_r | CRC Error (1 indicates that an Error occurred and 0 indicates that no Error occurred) |

# 5.2 OTP Efuse

Arora V FPGA products supports one-time programming and provides 128 Bit OTP space. Bit0 ~ Bit31 is the user space, which can be used to store security and other important information. Bit32~Bit95 is the DNA space, which stores the 64-bit unique identification information of the device.

The definition of GW5AT-60 OTP is as shown in Table 5-2.

**Table 5-2 GW5AT-60 OTP Definitions**

| Name | Bit Index | Description |
|---|---|---|
| User MISC | 0~9bit (10bits) | 0bit mfg_7bit(i2c_addr_2bit) |
| | | 1bit mfg_6bit(i2c_addr_0bit) |
| | | 2~5bit otp_2nd_boot_addr[3:0](4bits) |
| | | 6~9bit otp_1st _boot_addr[3:0](4bits) |
| User Define | 10~31bit (22bits) | user defined |
| Device DNA | 32~95bit (64bits) | 57bit DNA |
| USER Control | 96~127bit(32bits) | 96~98bit cfg_aes_only[2:0] |
| | | 99~101bit prgm_key_lock[2:0]<br>When this region is valid, JTAG cannot write to keys in the key/key2 region |
| | | 102~104bit rd_key_lock[2:0]<br>When this region is valid, JTAG cannot read the keys in the key/key2 region |
| | | 105~107bit prgm_fuse_user_lock[2:0] |
| | | 108~110bit rd_fuse_user_lock[2:0] |
| | | 112~114bit prgm_rd_dna_lock[2:0] |
| | | 115~117bit lock_sel_key_r[2:0]<br>When this region is valid, it means that the key2 region is selected, otherwise the key region is selected (as long as two bits of the 3bit data are set to 1, it means that the high region is valid). |
| | | 118~120bit prgm_user_misc_lock[2:0] |
| | | 121-123bit rd_user_misc_lock[2:0] |
| | | 124~126bit prgm_user_control_lock[2:0] |
| | | 127bit reserved |

# 6 Multi Boot and Background Update

The multi boot of GOWINSEMI Arora V FPGA products support flexible dynamic configuration and reliable background upgrade. When an error is detected during configuration, the FPGA can trigger a fallback feature that ensures a Golden firmware can be loaded into the device. The multi boot feature can only be used with the Master SPI mode.

## 6.1 Multi Boot Process

The Flash space can be divided into multiple regions for storing Multiboot Bitstream1, Multiboot Bitstream2, …, Multiboot BitstreamN, as well as the Golden Bitstream. There is no limit on the number of Bitstreams.

After power-up, the device first loads Multiboot1 Bitstream from address 0x0. Once the loading is completed, the device enters User_Mode to execute the corresponding logic functions.

In User_Mode, when a Reconfig command is issued or the RECONFIG_N pin is pulled low, the device loads Multiboot2 Bitstream from the predefined Multi2_Address in MSPI mode. After loading, the device re-enters User_Mode and executes the updated logic functions. Subsequent Reconfig commands or RECONFIG_N assertions will cause the device to load Multiboot3 Bitstream from Multi3_Address, and so on. This allows users to flexibly switch the device logic functions.

If an error occurs during the loading of any Multiboot Bitstream, the device will load the Golden Bitstream from the predefined Golden Address (0x80_0000) to ensure stable system operation. In addition, users can specify the starting address of the next Bitstream to be loaded within the current Bitstream through the EDA tool. For details, refer to Section 3.10 'MSPI 2nd Boot Address Operation' in the SUG502 Gowin Programmer User Guide.

If the Golden Bitstream fails to load, the device drives the DONE and READY pins low, and the done_final flag in the internal status register will be cleared.

The multi- configuration flow is as shown in Figure 6-1.

**Figure 6-1 Multi- Configuration Flow**

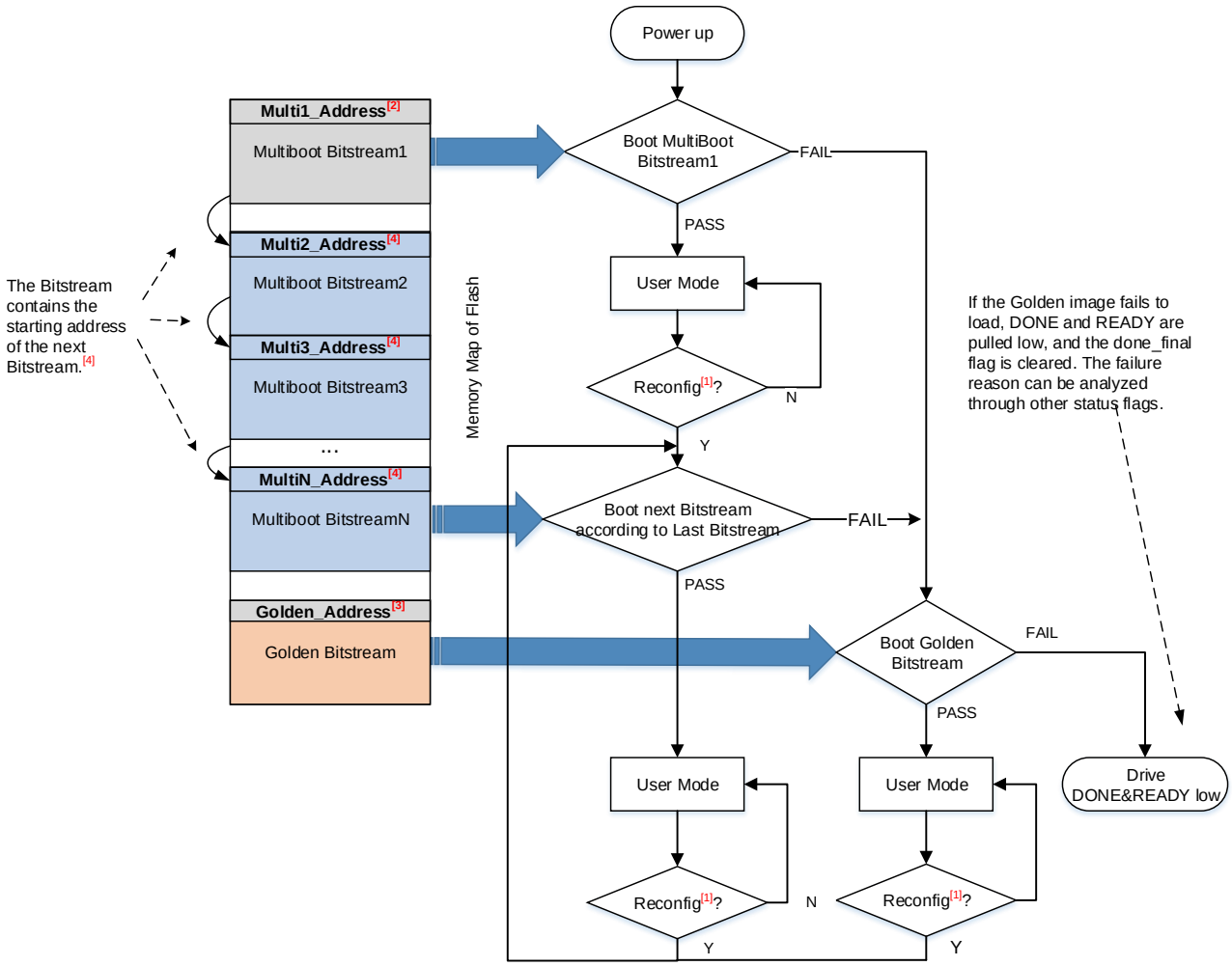


**Note!**

- [1] Reconfiguration can be triggered by pulling the RECONFIG_N pin low or issuing a Reconfig command.
- [2] The default address is 0x0.
- [3] The Golden_address defaults to 0x800000. Users can modify it through Gowin Programmer. For details, refer to SUG502, Gowin Programmer User Guide, Section 3.10 MSPI 2nd Boot Address Operation.
- [4] The loading address of Multi2–MultiN Bitstreams is stored in the preceding Bitstream. This can be configured in Gowin EDA tool options. For details, refer to SUG100, Gowin EDA Tool User Guide, Section 4.3.3 Project Configuration Editing.

# 6.2 Background Upgrade and Hotboot

Arora V FPGA products support background upgrade through JTAG/SSPI/QSSPI or UserLogic. Please refer to 3Configuration Interface for accessing Flash through the JTAG/SSPI/QSSPI interface. For accessing Flash through UserLogic, GOWIN official IP needs to be used. To improve system robustness, it is advised to reserve Golden Bistream area during remote upgrades.

In addition, Arora V FPGA products also support Hotboot mode, that is, after background upgrade, if the Reboot command is received or RECONFIG_N is triggered by the low level pulse from outside, all output

IO of the device will be locked in the current state until the wakeup is successful.

GOWIN

PROGRAMMING FOR THE FUTURE